SHARP SERVICE MANUAL

No. S4212XLH201KU

HI FI COMPONENT SYSTEM

MODEL XL-HF201P(BK)

XL-HF201P(BK) Hi Fi Component System consisting of XL-HF201P(BK) (main unit) and CP-HF200 (speaker system).

- In the interests of user-safety (Required by safety regulations in some countries) the set should be restored to its original condition and only parts identical to those specified be used.

Made for iPod iPhone iPad

USB PLAYBACK MP3 COMPACT disc DIGITAL AUDIO Plays Windows Media™

iPhone, iPod, iPod classic, iPod nano, and iPod touch are trademarks of Apple Inc., registered in the U.S. and other countries. iPad is a trademark of Apple Inc.

"Made for iPod," "Made for iPhone," and "Made for iPad" mean that an electronic accessory has been designed to connect specifically to iPod, iPhone, or iPad, respectively, and has been certified by the developer to meet Apple performance standards. Apple is not responsible for the operation of this device or its compliance with safety and regulatory standards. Please note that the use of this accessory with iPod, iPhone, or iPad may affect wireless performance.

CONTENTS

PRECAUTIONS FOR USING LEAD-FREE SOLDER

CHAPTER 1. GENERAL DESCRIPTION
[1] Important Service Safety Precaution 1-1
[2] Important Service Notes (for U.S.A only)..... 1-1
[3] Specifications 1-2
[4] Name Of Parts 1-3

CHAPTER 2. ADJUSTMENTS
[1] CD Section 2-1
[2] Test Mode 2-1
[3] Standard Specification Of Stereo System
Error Message Display Contents 2-1

CHAPTER 3. MECHANICAL DESCRIPTION
[1] Disassembly 3-1

CHAPTER 4. FLOWCHART
[1] Troubleshooting 4-1

CHAPTER 5. MAJOR PART DRAWING
[1] Function Table Of IC 5-1
[2] FL Display 5-5

CHAPTER 6. CIRCUIT DESCRIPTION
[1] Waveforms Of Servo Circuit 6-1
[2] Voltage 6-2

CHAPTER 7. DIAGRAMS
[1] Block Diagram..... 7-1

CHAPTER 8. CIRCUIT SCHEMATICS AND PARTS LAYOUT
[1] Notes On Schematic Diagram 8-1
[2] Type Of Transistor And LED 8-1
[3] Schematic Diagram 8-2
[4] Chart Of Connecting Wires..... 8-6
[5] Wiring Side Of PWB 8-7

PARTS GUIDE

Parts marked with " ⚠ " are important for maintaining the safety of the set. Be sure to replace these parts with specified ones for maintaining the safety and performance of the set.

SHARP CORPORATION

This document has been published to be used for after sales service only.
The contents are subject to change without notice.

PRECAUTIONS FOR USING LEAD-FREE SOLDER

1. Employing lead-free solder

"MAIN, DISPLAY, KEY/JACK, iPod, USB, SMPS PWB" of this model employs lead-free solder.
The LF symbol indicates lead-free solder, and is attached on the PWB and service manuals. The alphabetical character following LF shows the type of lead-free solder.

Example:

Sn-Ag-Cu Indicates lead-free solder of tin, silver and copper.

2. Using lead-free wire solder

When fixing the PWB soldered with the lead-free solder, apply lead-free wire solder. Repairing with conventional lead wire solder may cause damage or accident due to cracks.
As the melting point of lead-free solder (Sn-Ag-Cu) is higher than the lead wire solder by 40˚C, we recommend you to use a dedicated soldring bit, if you are not familiar with how to obtain lead-free wire solder or soldering bit, contact our service station or service branch in your area.

3. Soldering

As the melting point of lead-free solder (Sn-Ag-Cu) is about 220˚C which is higher than the conventional lead solder by 40˚C, and as it has poor solder wet ability, you may be apt to keep the soldering bit in contact with the PWB for extended period of time. However, since the land may be peeled off or the maximum heat-resistance temperature of parts may be exceeded, remove the bit from the PWB as soon as you confirm the steady soldering condition.
Lead-free solder contains more tin, and the end of the soldering bit may be easily corrected. Make sure to turn on and off the power of the bit as required.
If a different type of solder stays on the tip of the soldering bit, it is alloyed with lead-free solder. Clean the bit after every use of it.

When the tip of the soldering bit is blackened during use, file it with steel wool or fine sandpaper.
Be careful when replacing parts with polarity indication on the PWB silk.

Lead-free wire solder for servicing

Ref No.	Parts No.	Description
PWB-A	92LPWB8250MANS	MAIN (A1), DISPLAY (A2), KEY/JACK (A3), iPod (A4), USB (A5)
PWB-B	RUiTZA042AW01	SMPS

CHAPTER 1. GENERAL DESCRIPTION

[1] Important Service Safety Precaution

■ **CAUTION : "These servicing instructions are for use by qualified service personnel only. To reduce the risk of electric shock do not perform any servicing other than that contained in the operating instructions unless you are qualified to do so".**

■ **WARNING**

1. For continued safety, no modification of any circuit should be attempted.
2. Disconnect AC power before servicing.

[2] Important Service Notes (for U.S.A only)

BEFORE RETURNING THE AUDIO PRODUCT
(Fire & Shock Hazard)

Before returning the audio product to the user, perform the following safety checks.

1. Inspect all lead dress to make certain that leads are not pinched or that hardware is not lodged between the chassis and other metal parts in the audio product.
2. Inspect all protective devices such as insulating materials, cabinet, terminal board, adjustment and compartment covers or shields, mechanical insulators etc.
3. To be sure that no shock hazard exists, check for leakage current in the following manner.

* Plug the AC line cord directly into a 120 volt AC outlet.
* Using two clip leads, connect a 1.5k ohm, 10 watt resistor paralleled by a 0.15μF capacitor in series with all exposed metal cabinet parts and a known earth ground, such as conduit or electrical ground connected to earth ground.
* Use a VTVM or VOM with 1000 ohm per volt, or higher, sensitivity to measure the AC voltage drop across the resistor (See diagram).
* Connect the resistor connection to all exposed metal parts having a return path to the chassis (antenna, metal cabinet, screw heads, knobs and control shafts, escutcheon, etc.) and measure the AC voltage drop across the resistor.

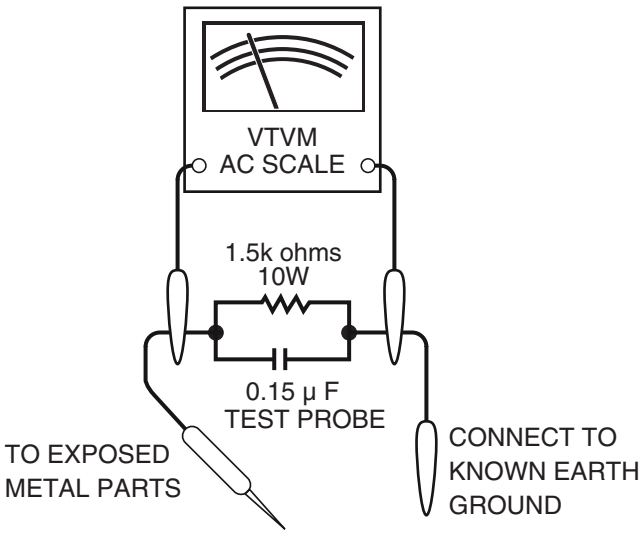

All check must be repeated with the AC line cord plug connection reversed.

Any reading of 0.3 volt RMS (this corresponds to 0.2 milliamp. AC.) Or more is excessive and indicates a potential shock hazard which must be corrected before returning the audio product to the owner.

[3] Specifications

■ General

Power source	AC 120 ~ 60 Hz
Power consumption	40 W
Dimensions	Width: 8 - 1/2" (215 mm) Height: 3 - 4/5" (96 mm) Depth: 13 - 1/5" (335 mm)
Weight	5.7 lbs. (2.6 kg)

■ Amplifier

Output power	RMS: Total 100 watt (50 W per channel into 4 ohms at 1 kHz, 10% T.H.D.) FTC: 30 watt minimum RMS per channel into 4 ohms from 20 Hz to 20 kHz, 10% T.H.D.
Output terminals	Speakers: 4 ohms 20Hz - 20kHz Subwoofer Pre-out (audio signal): 200 mV/10 k ohms at 70 Hz Video output: 1 Vp-p Headphones: 16 ohms (recommended: 32 ohms)
Input terminals	Audio In (audio signal): 500 mV/47 k ohms Line in (Analog input): 500 mV/47 k ohms

■ CD player

Type	Single disc multi-play compact disc player
Signal readout	Non-contact, 3-beam semiconductor laser pickup
D/A converter	Multi bit D/A converter
Frequency response	20 - 20,000 Hz
Dynamic range	90 dB (1 kHz)

■ USB (MP3 / WMA)

USB host interface	● Complies with USB 1.1 (Full Speed)/2.0 Mass Storage Class. ● Support Bulk only and CBI protocol.
Support file	● MPEG 1 Layer 3 ● WMA (Non DRM)
Bitrate support	● MP3 (32 ~ 320 kbps) ● WMA (64 ~ 160 kbps)
Other	● Maximum total number of MP3/WMA files is 65025. ● Maximum total number of folders is 999 INCLUSIVE of root directory. ● The ID3TAG information supported are TITLE, ARTIST and ALBUM only. ● Supports ID3TAG version 1 and version 2.
File system support	● Support USB devices with Microsoft Windows/DOS/FAT 12/FAT 16/ FAT 32. ● 2 kbyte block length for sector.

■ Tuner

Frequency range	FM: 87.5 - 108.0 MHz AM: 530 - 1,710 kHz
Preset	40 (FM and AM station)

■ Speaker

Type	2-way type speaker system 1" (2.5 cm) Dome-Tweeter 4-3/4" (12 cm) Woofer
Maximum input power	100 W
Rated input power	50 W
Impedance	4 ohms
Dimensions	Width: 5 - 13/16" (148 mm) Height: 10-5/16" (262 mm) Depth: 8" (203.5 mm)
Weight	5.4 lbs. (2.5 kg)/each

[4] Names Of Parts

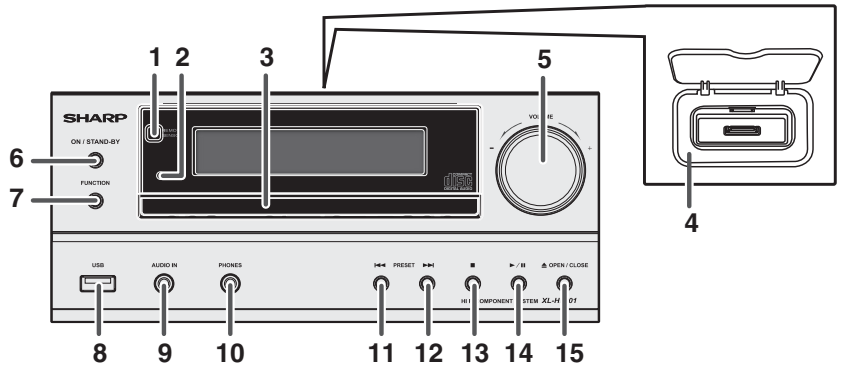

■ Front panel

1. Remote sensor
2. Timer indicator
3. Disc Tray
4. Docking Station for iPod or iPhone
5. Volume Control
6. On/Stand-by Button
7. FUNCTION Button
8. USB Terminal
9. Audio In Socket
10. Headphone Socket
11. Tuner Preset Down, CD/USB Track Down, iPod/iPhone Skip Down
12. Tuner Preset Up, CD/USB Track Up, iPod/iPhone Skip Up
13. Disc/USB Stop Button
14. Disc/USB/iPod/iPhone Play or Pause Button
15. Disc Tray Open/Close Button

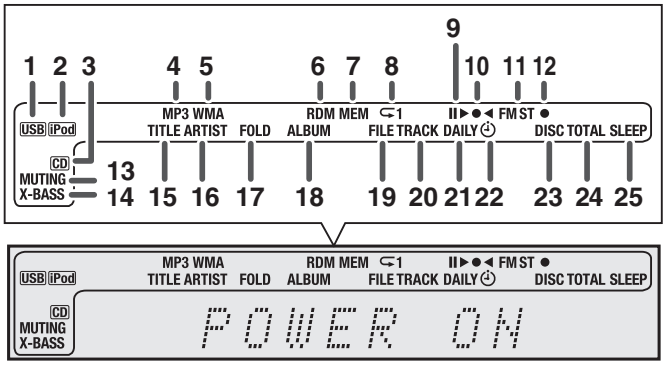

■ Display

1. USB Indicator
2. iPod Indicators
3. CD Indicator
4. MP3 Indicator
5. WMA Indicator
6. RDM (Random) Indicator
7. MEM (Memory) Indicator
8. Repeat Indicator
9. Play/Pause Indicator
10. Tuning FM/AM Indicator
11. FM Stereo Mode Indicator
12. Stereo Station Indicator
13. Muting Indicator
14. X-bass Indicator
15. Title Indicator
16. Artist Indicator
17. Folder Indicator
18. Album Indicator
19. File Indicator
20. Track Indicator
21. Daily Timer Indicator
22. Once Timer Indicator
23. Disc Indicator
24. Total Indicator
25. Sleep Indicator

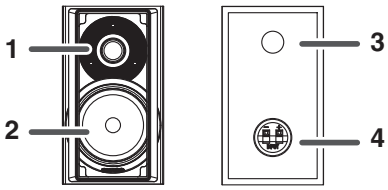

■ Speaker system

1. Dome-Tweeter
2. Woofer
3. Bass Reflex Duct
4. Speaker Terminal

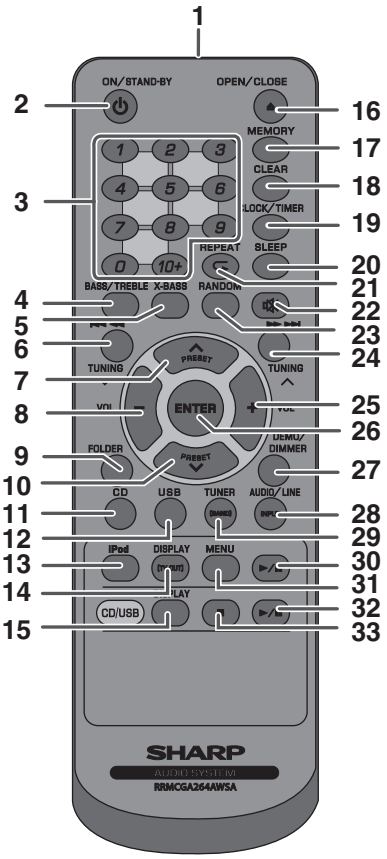

■ Remote control

1. Remote Control Transmitter
2. On/Stand-by Button
3. Numeric Buttons
4. Bass/Treble Button
5. X-Bass Button
6. Tuning Down, Skip Down, Fast Reverse, Time Down Button
7. Tuner Preset Up Button, iPod Cursor Up
8. Volume Down Button
9. Folder Button
10. Tuner Preset Down Button, iPod Cursor Down
11. CD Button
12. USB Button
13. iPod Button
14. iPod Display (TV OUT) Button
15. Disc/USB Display Button
16. Open/Close Button
17. Memory Button
18. Clear Button
19. Clock/Timer Button
20. Sleep Button
21. Repeat Button
22. Mute Button
23. Random Button
24. Tuning Up, Skip Up, Fast Forward, Time Up Button
25. Volume Up Button
26. Enter Button
27. Demo/Dimmer Button
28. Audio/Line (INPUT) Button
29. Tuner (BAND) Button
30. iPod Play/Pause Button
31. iPod Menu Button
32. CD/USB Play/Pause Button
33. CD/USB Stop Button

CHAPTER 2. ADJUSTMENTS

[1] CD Section

- **Adjustment**
  Since this CD system incorporates the following automatic adjustment functions, readjustment is not needed when replacing the pickup. Therefore, different PWBs and pickups can be combined freely.

  Each time a disc is changed, these adjustments are performed automatically. Therefore, playback of each disc can be performed under optimum conditions.

Items adjusted automatically

1) Offset adjustment (The offset voltage between the head amplifier output and the VREF reference voltage is compensated inside the IC)
   * Focus offset adjustment
   * Tracking offset adjustment
2) Tracking balance adjustment
3) Gain adjustment (The gain is compensated inside the IC so that the loop gain at the gain crossover frequency will be 0 dB.)
   * Focus gain adjustment
   * Tracking gain adjustment

[2] Test Mode

[Test Mode Input Method]
1. During power stand-by condition, press [1] -> [2] -> [4] -> [5] buttons at remote control sequently.
2. MCU will start up with software version display as below.

" H201Hyymmdd "
↓
" H201#zzRR "
↓
" mmddRxxxx "

yyyy : year (Ex, 11)
mm : month (Ex, July -> 07)
dd : day (Ex, 01)

RR : version (00 ~ 99)
ZZ : stage development →
  03: after TEST BOARD start
  05: after 0ji AUTO start (0.5 ROM)
  07: after 0ji DR MTG (1st ROM)
  08: after Off Tool (Main Line start)
  09: after PP production approval MTG
  10: after MP production approval MTG
: area setting
  H : Europe
  U : USA
Rxxxx : Servo F/W version

3. Press [EJECT] button at the main unit to enter the KEY Test Mode.
4. The display will change as below for each main unit button is pressed.

[OPEN / CLOSE]	: All displays light up with Dimmer Off
[PRESET DOWN]	: Display "KEY 1-2" at lower line display
[PRESET UP]	: Display "KEY 1-3" at lower line display
[STOP]	: Display "KEY 1-5" at lower line display
[PLAY / PAUSE]	: Display "KEY 1-1" at lower line display
[FUNCTION]	: Display "KEY 1-2" at lower line display

5. [Existing Test Mode]
   5.1. While in Version display or in Test Mode Function press ON / STAND-BY button (remote control / unit).
   5.2. All display light up in Dimmer Off (2sec) => Dimmer 1 (2sec) => Dimmer 2 (2sec) => finally display "Clear All" and execute reset, before goto standby (demo).

[3] Standard Specification Of Stereo System Error Message Display Contents

SYSTEM PROTECT detection and AMP PROTECT detection display

In case AMP Shut Down, SYSTEM PROTECT, FAULT PROTECT or AMP Over-Temp Warning Protect has occurred, the unit will automatically enter to stand-by mode ON/Standby LED willl be flashing as below:-

Example: In case of speaker abnormal

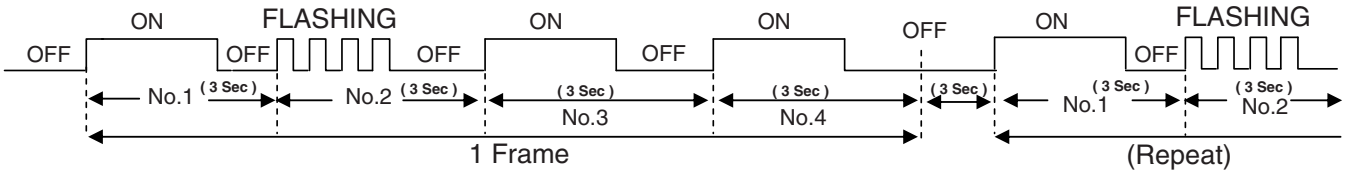

1 : SYSTEM PROTECT
2 : AMP Over Temperature Warning Protect
3 : AMP Shut Down Protect
4 : FAULT

CHAPTER 3. MECHANICAL DESCRIPTION

[1] Disassembly

Caution On Disassembly

Follow the below-mentioned notes when disassembling the unit and reassembling it, to keep it safe and ensure excellent performance:

1. Take compact disc out of the unit.
2. Be sure to remove the power supply plug from the wall outlet before starting to disassemble the unit.
3. Take off nylon bands or wire holders where they need to be removed when disassembling the unit. After servicing the unit, be sure to rearrange the leads where they were before disassembling.

STEP	REMOVAL	PROCEDURE	FIGURE
1	Top Cabinet with iPod PWB	1. Screw.....(A1) X 8 2. Socket .....(A2) X 1	1 2
2	Rear Panel	1. Screw.....(B1) X 7 2. Screw.....(B2) X 1	1
3	Main PWB	1. Screw.....(C1) X 2 2. Socket .....(C2) X 6 3. Flat Cable .....(C3) X 2	2
4	Front Panel Assy	1. Screw.....(D1) X 2 2. Screw.....(D2) X 2 3. Socket .....(D3) X 1 4. Hook .....(D4) X 2	2
5	SMPS PWB	1. Screw.....(E1) X 3 2. Socket .....(E2) X 1	3 2
6	CD Mechanism Assy	1. Screw.....(F1) X 4	3
7	CD Mechanism Unit	1. Screw..... (G1) X 4	4
8	Display PWB	1. Knob .....(H1) X 1 2. Nut .....(H2) X 1 3. Washer .....(H3) X 1 4. Screw.....(H4) X 3	5
9	Key/Jack PWB	1. Screw.....(J1) X 4	5
10	USB PWB	1. Screw.....(K1) X 1	5
11	iPod PWB	1. Copper Sheet .... (L1) X 1 2. iPod Cover..... (L2) X 1 3. Screw..... (L3) X 2	6

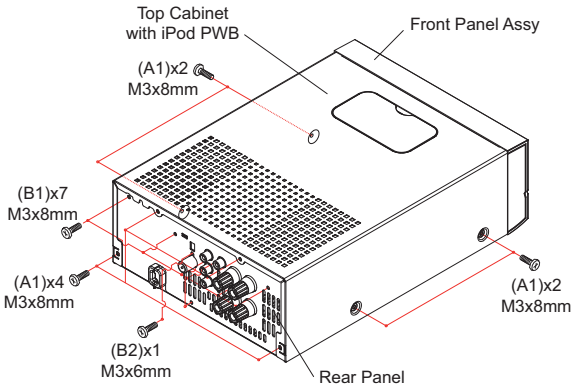

Figure 1

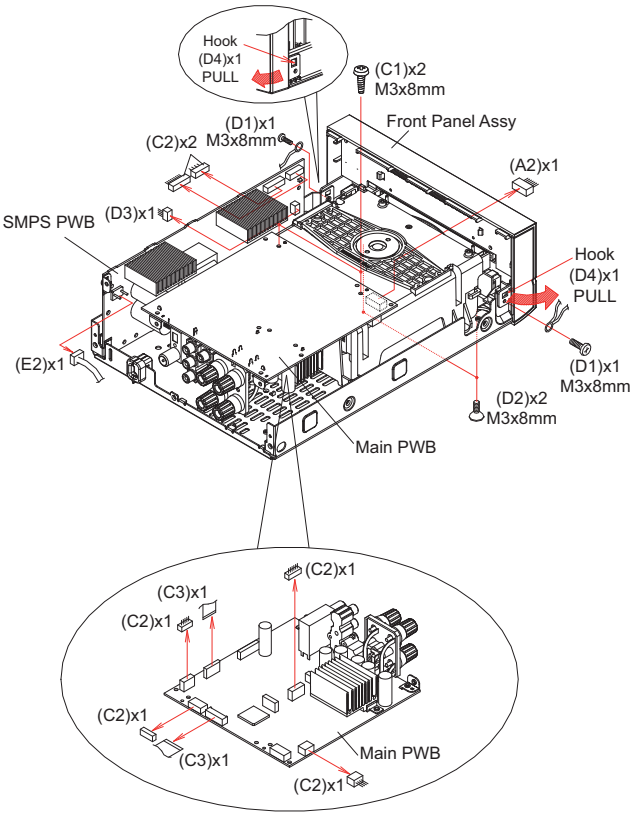

Figure 2

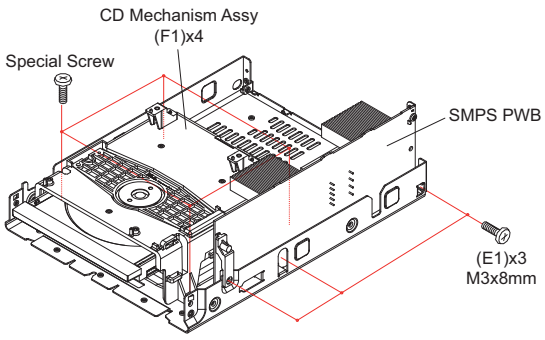

Figure 3

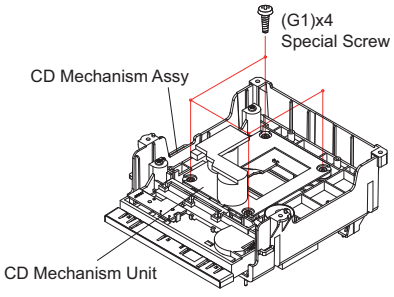

Figure 4

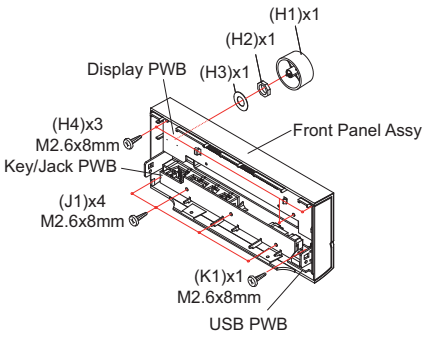

Figure 5

STEP	REMOVAL	PROCEDURE	FIGURE
1	Woofer	1. Net Frame Ass'y .....(A1) X 1 2. Screw.....(A2) X 4 3. Screw.....(A3) X 4 4. Woofer Ring.....(A4) X 1	7 7 8 8
2	Dome-Tweeter	1. Screw.....(B1) X 4 2. Tweeter Ring .....(B2) X 1 2. Screw.....(B3) X 4	8 8 9

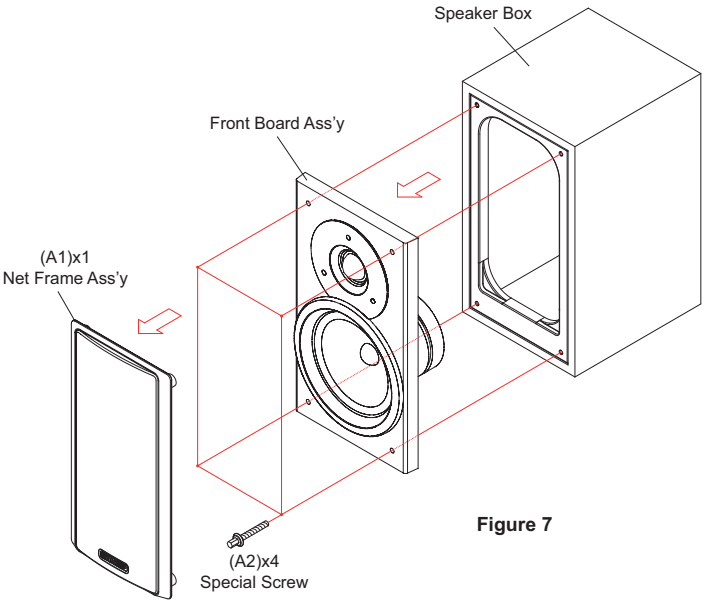

Figure 7

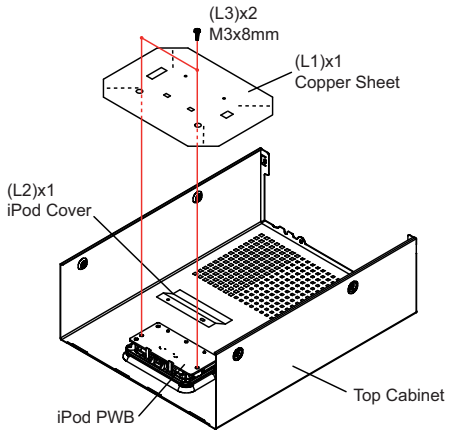

Figure 6

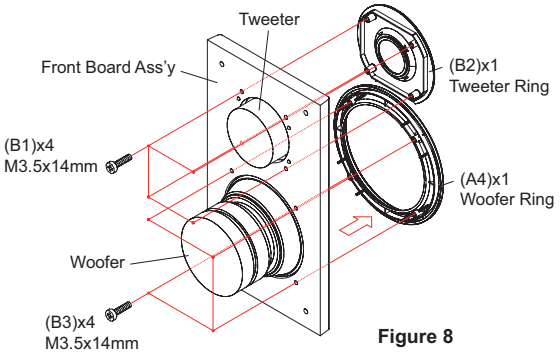

Figure 8

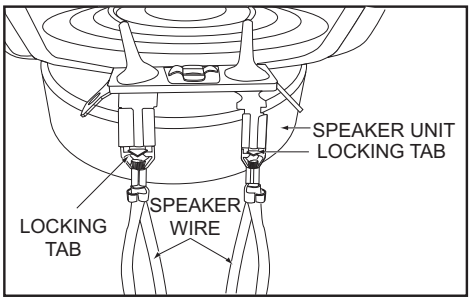

CAUTION:
TO REMOVE SPEAKER UNIT, PRESS THESE LOCKING TABS TO RELEASE SPEAKER WIRES.

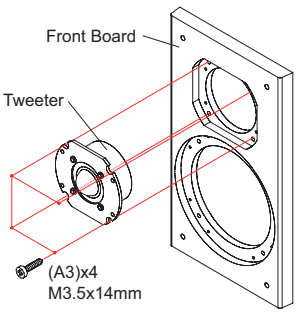

Figure 9

CHAPTER 4. FLOWCHART

[1] Troubleshooting

1. When the CD does not function

The CD section may not operate when the objective lens of the optical pickup is dirty. Clean the objective lens, and check the playback operation. When this section does not operate even after the above step is taken, check the following items.

Remove the cabinet and follow the troubleshooting instructions.

"Track skipping and/or no TOC (Table Of Contents) may be caused by build up of dust other foreign matter on the laser pickup lens. Before attempting any adjustment make certain that the lens is clean. If not, clean it as mentioned below."

Turn the power off.

Gently clean the lens with a lens cleaning tissue and a small amount of isopropyl alcohol.

Do not touch the lens with the bare hand.

		Parts code
1.	CD optical pickup Lens cleaner disc	UDSKA0004AFZZ

HOW TO USE

1. Using the brush in the cleaner cap, apply 1 or 2 drops of the cleaning fluid to the brush on the CD cleaner disc which has the mark next to it.
2. Place the CD cleaner disc onto the CD disc tray with the brush side down, then press the play button.
3. You will hear music for about 20 seconds and the CD player will automatically stop. If it still play continuously, press the stop button.

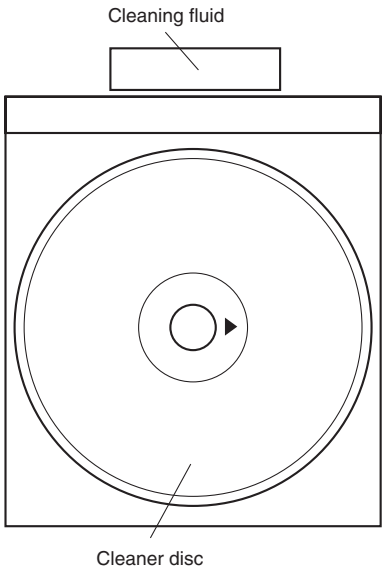

CAUTION

- The CD lens cleaner should be effective for 30-50 operations, however if the brushes become worn out earlier then please replace the cleaner disc.
- If the CD cleaner brushes become very wet then wipe off any excess fluid with a soft cloth.
- Do not drink the cleaner fluid or allow it contact with the eyes. In the event of this happening then drink and / or rinse with clean water and seek medical advice.
- The CD cleaner disc must not be used on car CD players or on computer CD-ROM drives.
- All rights reserved. Unauthorized duplicating, broadcasting and renting this product is prohibited by law.

2. When a CD cannot be played

2.1. Pressing the CD operation key is accepted, but playback does not occur.

1) Focus-HF system check

2) Tracking system check

3) Spin system check

4) PPL system check

(1) Focus-RF system check.

Although a CD is inserted and the cover is closed, "NO DISC" is displayed.

Press the Tray1 CD Eject Button without inserting a disc, and try starting the playback operation.

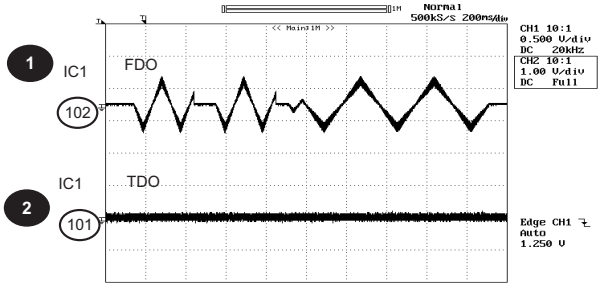

Figure 1

1. Does the pickup move to the PICKUP-IN Switch (NSW1) position?
   - No → Sled motor (NM2).
   - Yes ↓
2. Does the focus (lens) move up and down? (Waveform drawing Figure 1)
   - No → Check the focus peripheral circuit.
   - Yes ↓
3. Is the laser lit?
   - No → Check the laser diode driver Q5 peripheral circuit.
   - Yes ↓
4. Is the turntable rotating?
   - No → Spindle motor (NM1).

When a disc is loaded, start playback operation.

1. Is focus servo activated? (Waveform drawing Figure 2)
   - No → Pins 98, 99, 101,102,106 ~113 on IC1 Check the laser diode driver Q5 peripheral circuit.
   - Yes ↓
2. Is the RF waveform normal? (Waveform drawing Figure 3)
   - No → If the level is not normal.

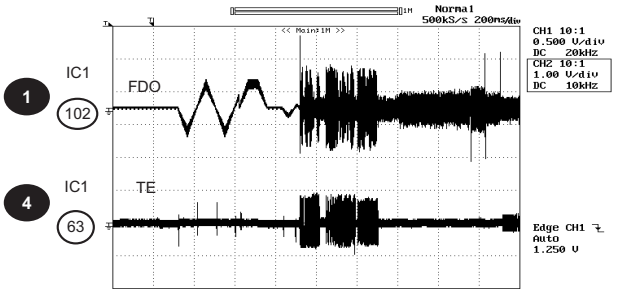

Figure 2

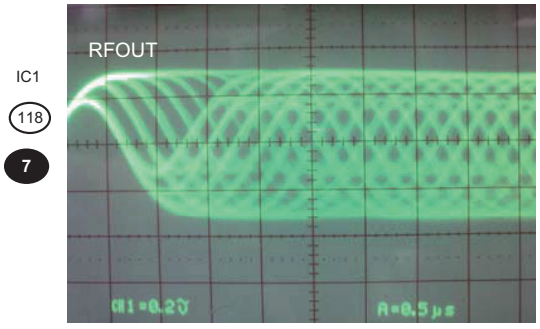

Figure 3

(2) Tracking system check

Check the TE waveform at pin 16 on IC1.

If the waveform shown in Figure 4 appears and soon after NO DISC appears?

Yes → The tracking servo is not activated.
Check the peripheral circuits at pins 98, 99, 101, 102 on IC1, and FFC1.

↓ No

"Initialization" is possible, but play is not possible?

Yes → A normal jump operation cannot be completed or the beginning of the track cannot be found.
Check the around pin 101 on IC1.

↓ No

"Initialization" is not possible. → Data cannot be read. Check the VCO-PLL (Pin125 ~128 on IC1) system.

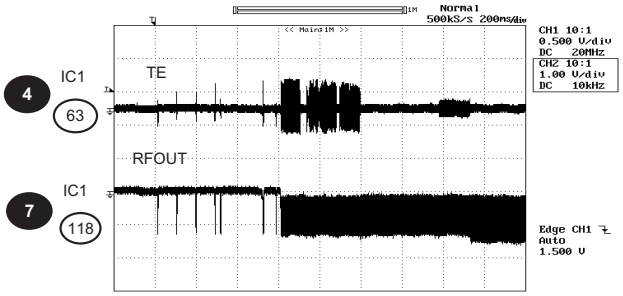

Figure 4

(3) Spin system check.

Press the OPEN/CLOSE switch without inserting a disc, and then try starting the play operation.

1. The turntable rotates a little?
(Waveform drawing Figure 5)

Yes → The spin driver circuit is OK.

↓ No

2. The turntable doesn't rotate. → Check around pin 98 on IC1, pins 1 and 2 on CNP2.

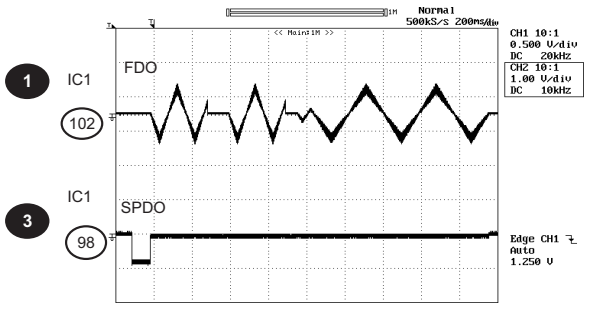

Figure 5

(4) PLL system check.

When a disc is loaded, start play operation.

↓

The RF waveform is normal, but the TOC data cannot be read.

↓

Check the PLL waveform. (Figure 6)

↓

Check around pins 125~ 128 on IC1.

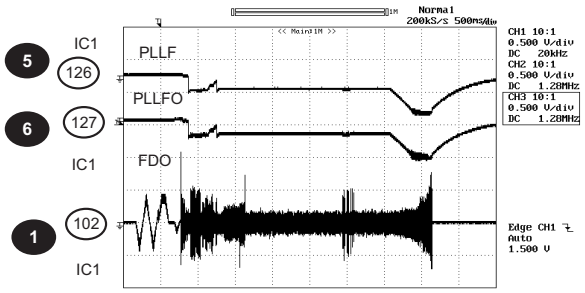

Figure 6

CHAPTER 5. MAJOR PART DRAWING

[1] Function Table Of IC

IC1 RH-IXA311AW00 : System Microcomputer (1/4)

Pin No.	NAME	Input/ Output	Type	Description
1	H/P-SW P3_3 / SSI	Input	CMOS Input / Output	HEADPHONE IN DETECTION SWITCH H : IN , L : OUT
2	TUN_SDA / DAP_SDA P3_4 / SDA / SCS	Input / Output	CMOS Input / Output	TUNER/DAP DATA I2C BUS LINE
3	MODE MODE	Input	Input	CONNECT THIS PIN TO VCC VIA A RESISTOR
4	XCIN P4_3 / XCIN	Input	CMOS Input / Output	32.768kHz CRYSTAL (SUB CLOCK)
5	XCOUT P4_4 / XCOUT	Output	CMOS Input / Output	32.768kHz CRYSTAL (SUB CLOCK)
6	RESET RESET	Input	Input	RESET INPUT. ACTIVE "L" CONNECT TO WRITER RESET LINE DURING FLASH
7	XOUT P4_7 / XOUT	Output	Input	8MHz CERAMIC OSCILLATOR (MAIN CLOCK)
8	VSS VSS / AVSS	--	--	GROUND
9	XIN P4_6 / XIN	Input	Input	8MHz CERAMIC OSCILLATOR (MAIN CLOCK)
10	VCC VCC / AVCC	--	--	3.3V SUPPLY
11	DAP_RST P5_4 / TRCIOD	Output	CMOS Input / Output	DAP RESET CONTROL H : NORMAL , L : RESET
12	DAP_PWDN P5_3 / TRCIOC	Output	CMOS Input / Output	DAP POWER DOWN CONTROL H : NORMAL , L : POWER DOWN
13	DAP_MUTE P5_2 / TRCIOB	Output	CMOS Input / Output	DAP MUTE CONTROL H : OFF , L : ON
14	+12V_EN P5_1 / TRCIOA / TRCTRG	Output	CMOS Input / Output	12V SUPPLY CONTROL
15	DSEL_OE P5_0 / TRCCLK	Output	CMOS Input / Output	D+/D- BUS SELECTOR OUTPUT ENABLE H : DISCONNECT , L : CONNECT
16	FL_CS P2_7 / TRDIOD1	Output	CMOS Input / Output	FL DRIVER CHIP SELECT OUTPUT
17	FL_RESET P2_6 / TRDIOC1	Output	CMOS Input / Output	FL DRIVER RESET
18	iPod_DET P2_5 / TRDIOB1	Input	CMOS Input / Output	iPod IN DETECTION L : IN , H : OUT
19	FAULT P2_4 / TRDIOA1	Input	CMOS Input / Output	CURRENT LIMITTER IC ERROR DETECT
20	I_SW P2_3 / TRDIOD0	Output	CMOS Input / Output	VBUS CONTROL SWITCH FOR IPOD CHARGING H: iPod , L : OTHER
21	U_SW P2_2 / TRDIOC0	Output	CMOS Input / Output	VBUS CONTROL SWITCH FOR USB CHARGING H: USB , L : OTHER
22	FW_UPD_STA P2_1 / TRDIOB0	Input	CMOS Input / Output	FIRMWARE UPDATE STATUS
23	DSEL_S P2_0 / TRDIOA0 / TRDCLK	Output	CMOS Input / Output	D+/D- BUS SELECTOR CONTROL H : iPod , L : USB
24	RX_IN P1_7 / TRAIO / INT1	Input	CMOS Input / Output	REMOCON SENSOR INPUT
25	FL_SCK P1_6 / CLK0	Output	CMOS Input / Output	FL DRIVER CLOCK OUTPUT
26	FW_UPD_PRO P1_5 / RXD0 / (TRAIO) / (INT1)	Input	CMOS Input / Output	FIRMWARE UPDATE PROGRESS
27	FL_SDATA P1_4 / TXD0	Output	CMOS Input / Output	FL DRIVER DATA OUTPUT

IC1 RH-IXA311AW00 : System Microcomputer (2/4)

Pin No.	NAME	Input/ Output	Type	Description
28	TRAY_MOT-	Output	CMOS Input / Output	TRAY MOTOR - CONTROL
	P8_6			
29	TRAY_MOT+	Output	CMOS Input / Output	TRAY MOTOR + CONTROL
	P8_5 / TRFO12			
30	TRAY_IN	Input	CMOS Input / Output	TRAY CLOSE SWITCH DETECTION
	P8_4 / TRFO11			
31	TRAY_OUT	Input	CMOS Input / Output	TRAY OPEN SWITCH DETECTION
	P8_3 / TRFO10 / TRFI			
32	A_MUTE	Output	CMOS Input / Output	AMP MUTE CONTROL
	P8_2 / TRFO02			
33	NC	Output	CMOS Input / Output	Fix "L"
	P8_1 / TRFO01			
34	USB_IN	Input	CMOS Input / Output	USB DETECTION H : DETACH , L : ATTACH
	P8_0 / TRFO00			
35	CD_MREQ	Output	CMOS Input / Output	DATA TRANSMISSION REQUEST TO CD DSP
	P6_0 / TREO			
36	SYS_STOP	Input	CMOS Input / Output	POWER FAILURE DETECTION
	P4_5 / INT0			
37	CD_SREQ	Input	CMOS Input / Output	DATA TRANSMISSION REQUEST TO CD DSP
	P6_6 / INT2 / TXD1			
38	NC	Output	CMOS Input / Output	Fix "L"
	P6_7 / INT3 / RXD1			
39	CD_SCLK	Output	CMOS Input / Output	DATA TRANSMISSION/RECEPTION SYNCHRONOUS CLOCK TO CD DSP
	P6_5 / (CLK1) / CLK2			
40	CD_SO	Input	CMOS Input / Output	DATA OUTPUT FROM CD DSP
	P6_4 / RXD2			
41	CD_SI	Output	CMOS Input / Output	DATA INPUT TO CD DSP
	P6_3 / TXD2			
42	CD_RST	Output	CMOS Input / Output	CD DSP RESET
	P3_1 / TRBO			
43	AMP_OTW	Input	CMOS Input / Output	AMPLIFIER OVERTEMPERATURE WARNING DETECTION H : NORMAL , L : ABNORMAL
	P3_0 / TRAO			
44	AMP_SD	Input	CMOS Input / Output	AMPLIFIER SHUTDOWN DETECTION H : NORMAL , L : ABNORMAL
	P3_6 / (INT1)			
45	IN_SO	Output	CMOS Input / Output	INPUT SELECTOR CONTROL 0
	P3_2 / (INT2)			
46	IN_S1	Output	CMOS Input / Output	INPUT SELECTOR CONTROL 1
	P1_3 / KI3 / AN11			
47	TUN_RST	Output	CMOS Input / Output	TUNER RESET
	P1_2 / KI2 / AN10			
48	S/W_MUTE	Output (A / D)	CMOS Input / Output	SUBWOOFER MUTE CONTROL
	P1_1 / KI1 / AN9			
49	iPod_EN	Output (A / D)	CMOS Input / Output	CURRENT LIMITTER IC SELECTOR H:IPOD L:OTHERS
	P1_0 / KI0 / AN8			
50	JOG_1/2	Input (A / D)	CMOS Input / Output	JOG SIGNAL A/D INPUT
	P0_0 / AN7			
51	KEY_1	Input (A / D)	CMOS Input / Output	POWER KEY DETECTION
	P0_1 / AN6			
52	KEY_2	Input (A / D)	CMOS Input / Output	KEY2 LINE A/D DETECTION
	P0_2 / AN5			
53	CURRENT_LIMIT	Output (A / D)	CMOS Input / Output	CURRENT LIMITTER IC SET
	P0_3 / AN4			
54	USB_EN	Output (A / D)	CMOS Input / Output	CURRENT LIMITTER IC SELECTOR H:USB L:OTHERS
	P0_4 / AN3			
55	TIMER_LED	Output	CMOS Input / Output	TIMER LED CONTROL H : ON , L : OFF
	P6_2			
56	AC-RELAY	Output	CMOS Input / Output	MAIN TRANS ON/OFF CONTROL H : POWER ON/DEMO , L : POWER OFF/ECO
	P6_1			

IC1 RH-IXA311AW00 : System Microcomputer (3/4)

Pin No.	NAME	Input/ Output	Type	Description
57	LEVEL_DET	Input (A / D)	CMOS Input / Output	ANALOG AUDIO LEVEL INPUT A/D DETECTION
	P0_5 / AN2 / CLK1			
58	AREA	Input (A / D)	CMOS Input / Output	DESTINATION SETTING A/D INPUT
	P0_6 / AN1 / DA0			
59	VSS	--	--	GROUND
	VSS / AVSS			
60	SYS_PROTECT	Input (A / D)	CMOS Input / Output	SUPPLY ABNORMAL A/D DETECTION
	P0_7 / AN0 / DA1			
61	VREF	--	--	A/D CONVERTER REFERENCE VOLTAGE SUPPLY
	VREF			
62	VCC	--	--	3.3V SUPPLY
	VCC / AVCC			
63	H/P-MUTE	Output	CMOS Input / Output	HEADPHONE MUTE CONTROL L : ON , H : OFF
	P3_7 / SSO			
64	TUN_SCL/DAP_SCL	Output	CMOS Input / Output	TUNER/DAP CLOCK I2C BUS LINE
	P3_5 / SCL / SSCK			

IC1 RH-IXA311AW00 : System Microcomputer (IXA311AW) (4/4)

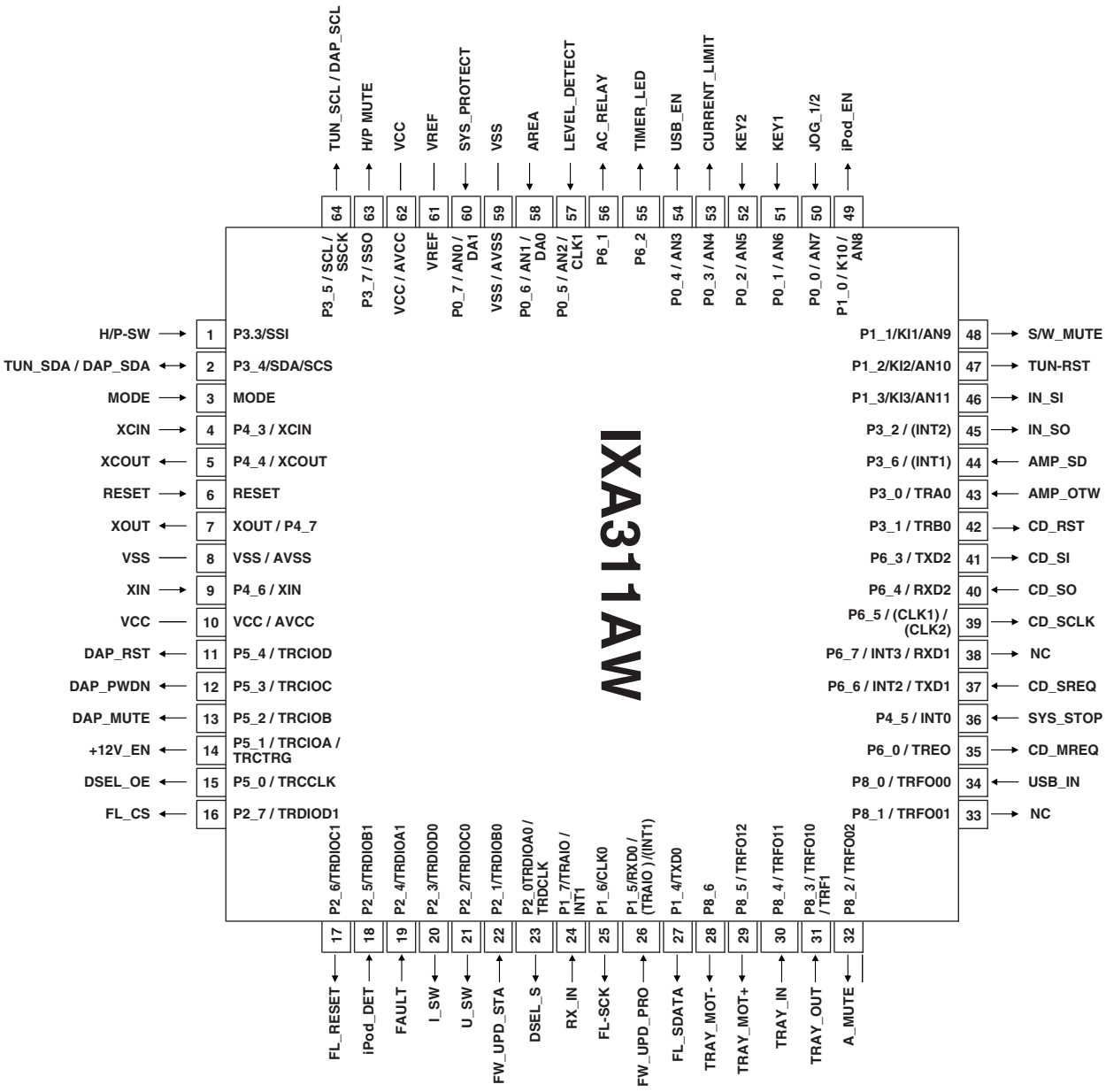

Figure 5-1 Block Diagram of IC

[2] FL Display

FL700 VVKNA16SM21-1

GRID ASSIGNMENT

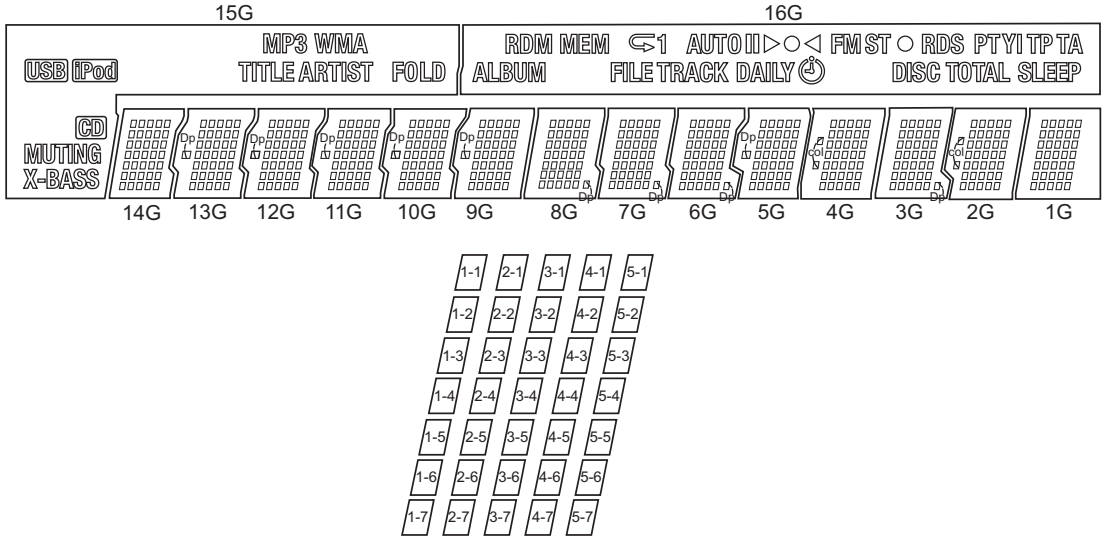

ANODE CONNECTION

	16G	15G	14G	13G	12G	11G	10G	9G	8G	7G	6G	5G	4G	3G	2G	1G
P1			1– 1	1– 1	1– 1	1– 1	1– 1	1– 1	1– 1	1– 1	1– 1	1– 1	1– 1	1– 1	1– 1	1– 1
P2	DAILY		2– 1	2– 1	2– 1	2– 1	2– 1	2– 1	2– 1	2– 1	2– 1	2– 1	2– 1	2– 1	2– 1	2– 1
P3	TRACK		3– 1	3– 1	3– 1	3– 1	3– 1	3– 1	3– 1	3– 1	3– 1	3– 1	3– 1	3– 1	3– 1	3– 1
P4	AUTO		4– 1	4– 1	4– 1	4– 1	4– 1	4– 1	4– 1	4– 1	4– 1	4– 1	4– 1	4– 1	4– 1	4– 1
P5	FILE		5– 1	5– 1	5– 1	5– 1	5– 1	5– 1	5– 1	5– 1	5– 1	5– 1	5– 1	5– 1	5– 1	5– 1
P6	B		1– 2	1– 2	1– 2	1– 2	1– 2	1– 2	1– 2	1– 2	1– 2	1– 2	1– 2	1– 2	1– 2	1– 2
P7	1 (upper)		2– 2	2– 2	2– 2	2– 2	2– 2	2– 2	2– 2	2– 2	2– 2	2– 2	2– 2	2– 2	2– 2	2– 2
P8			3– 2	3– 2	3– 2	3– 2	3– 2	3– 2	3– 2	3– 2	3– 2	3– 2	3– 2	3– 2	3– 2	3– 2
P9	A		4– 2	4– 2	4– 2	4– 2	4– 2	4– 2	4– 2	4– 2	4– 2	4– 2	4– 2	4– 2	4– 2	4– 2
P10	CHAP		5– 2	5– 2	5– 2	5– 2	5– 2	5– 2	5– 2	5– 2	5– 2	5– 2	5– 2	5– 2	5– 2	5– 2
P11	MEM		1– 3	1– 3	1– 3	1– 3	1– 3	1– 3	1– 3	1– 3	1– 3	1– 3	1– 3	1– 3	1– 3	1– 3
P12	ALBUM		2– 3	2– 3	2– 3	2– 3	2– 3	2– 3	2– 3	2– 3	2– 3	2– 3	2– 3	2– 3	2– 3	2– 3
P13	RDM		3– 3	3– 3	3– 3	3– 3	3– 3	3– 3	3– 3	3– 3	3– 3	3– 3	3– 3	3– 3	3– 3	3– 3
P14			4– 3	4– 3	4– 3	4– 3	4– 3	4– 3	4– 3	4– 3	4– 3	4– 3	4– 3	4– 3	4– 3	4– 3
P15		FOLD	5– 3	5– 3	5– 3	5– 3	5– 3	5– 3	5– 3	5– 3	5– 3	5– 3	5– 3	5– 3	5– 3	5– 3
P16		1	1– 4	1– 4	1– 4	1– 4	1– 4	1– 4	1– 4	1– 4	1– 4	1– 4	1– 4	1– 4	1– 4	1– 4
P17	(left)	S.BASS	2– 4	2– 4	2– 4	2– 4	2– 4	2– 4	2– 4	2– 4	2– 4	2– 4	2– 4	2– 4	2– 4	2– 4
P18		ARTIST	3– 4	3– 4	3– 4	3– 4	3– 4	3– 4	3– 4	3– 4	3– 4	3– 4	3– 4	3– 4	3– 4	3– 4
P19	1 (lower)	WMA	4– 4	4– 4	4– 4	4– 4	4– 4	4– 4	4– 4	4– 4	4– 4	4– 4	4– 4	4– 4	4– 4	4– 4
P20	2	TITLE	5– 4	5– 4	5– 4	5– 4	5– 4	5– 4	5– 4	5– 4	5– 4	5– 4	5– 4	5– 4	5– 4	5– 4
P21	3	MP3	1– 5	1– 5	1– 5	1– 5	1– 5	1– 5	1– 5	1– 5	1– 5	1– 5	1– 5	1– 5	1– 5	1– 5
P22	4	AAC	2– 5	2– 5	2– 5	2– 5	2– 5	2– 5	2– 5	2– 5	2– 5	2– 5	2– 5	2– 5	2– 5	2– 5
P23	FM		3– 5	3– 5	3– 5	3– 5	3– 5	3– 5	3– 5	3– 5	3– 5	3– 5	3– 5	3– 5	3– 5	3– 5
P24	ST		4– 5	4– 5	4– 5	4– 5	4– 5	4– 5	4– 5	4– 5	4– 5	4– 5	4– 5	4– 5	4– 5	4– 5
P25	(right)	DAB	5– 5	5– 5	5– 5	5– 5	5– 5	5– 5	5– 5	5– 5	5– 5	5– 5	5– 5	5– 5	5– 5	5– 5
P26	DISC	DOLBY PLII	1– 6	1– 6	1– 6	1– 6	1– 6	1– 6	1– 6	1– 6	1– 6	1– 6	1– 6	1– 6	1– 6	1– 6
P27	RDS	DOLBY DIGITAL	2– 6	2– 6	2– 6	2– 6	2– 6	2– 6	2– 6	2– 6	2– 6	2– 6	2– 6	2– 6	2– 6	2– 6
P28	TOTAL	iPod	3– 6	3– 6	3– 6	3– 6	3– 6	3– 6	3– 6	3– 6	3– 6	3– 6	3– 6	3– 6	3– 6	3– 6
P29	PTYI	USB	4– 6	4– 6	4– 6	4– 6	4– 6	4– 6	4– 6	4– 6	4– 6	4– 6	4– 6	4– 6	4– 6	4– 6
P30	SLEEP	DVD	5– 6	5– 6	5– 6	5– 6	5– 6	5– 6	5– 6	5– 6	5– 6	5– 6	5– 6	5– 6	5– 6	5– 6
P31	TP	BD	1– 7	1– 7	1– 7	1– 7	1– 7	1– 7	1– 7	1– 7	1– 7	1– 7	1– 7	1– 7	1– 7	1– 7
P32	TA	CD	2– 7	2– 7	2– 7	2– 7	2– 7	2– 7	2– 7	2– 7	2– 7	2– 7	2– 7	2– 7	2– 7	2– 7
P33		DivX	3– 7	3– 7	3– 7	3– 7	3– 7	3– 7	3– 7	3– 7	3– 7	3– 7	3– 7	3– 7	3– 7	3– 7
P34		MUTING	4– 7	4– 7	4– 7	4– 7	4– 7	4– 7	4– 7	4– 7	4– 7	4– 7	4– 7	4– 7	4– 7	4– 7
P35		X-BASS	5– 7	5– 7	5– 7	5– 7	5– 7	5– 7	5– 7	5– 7	5– 7	5– 7	5– 7	5– 7	5– 7	5– 7
P36				Dp	Dp	Dp	Dp	Dp	Dp	Dp	Dp	Dp	col	Dp	col	

OUTER DIMENSIONS

PIN CONNECTION

PIN NO.	66	65	64	63	62	61	60	59	58	57	56	55	54	53	52	51	50	49	48	47	46	45	44	43	42	41	40	39	38	37	36	35	34
CONNECTION	F2	NP	F2	NP	NP	16G	15G	P35	P34	P33	P32	P31	P30	P29	P28	P27	P26	P25	P24	NC	P23	P22	P21	P20	P19	P18	P17	NC	P16	NC	P15	P14	P13

33	32	31	30	29	28	27	26	25	24	23	22	21	20	19	18	17	16	15	14	13	12	11	10	9	8	7	6	5	4	3	2	1
P12	P11	P10	P9	P8	P7	P6	P5	P4	P3	P2	P1	P36	NC	14G	13G	12G	11G	10G	9G	8G	7G	6G	5G	4G	3G	2G	1G	NP	NP	F1	NP	F1

Note
1) Fn : Filament Pin
2) NP : No pin
3) Pn : Anode pin
4) NG : Grid pin
5) NC : No connected pin

CHAPTER 6. CIRCUIT DESCRIPTION

[1] Waveform Of Servo Circuit

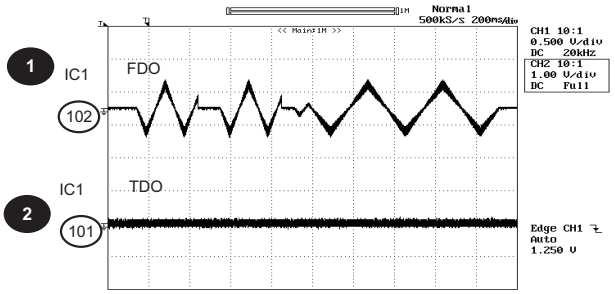

Figure 1

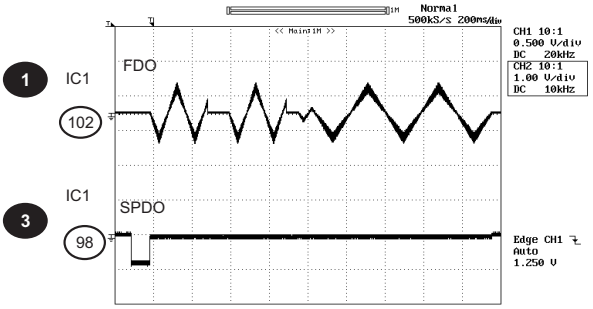

Figure 2

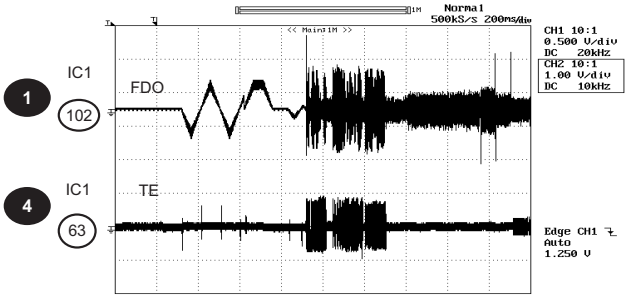

Figure 3

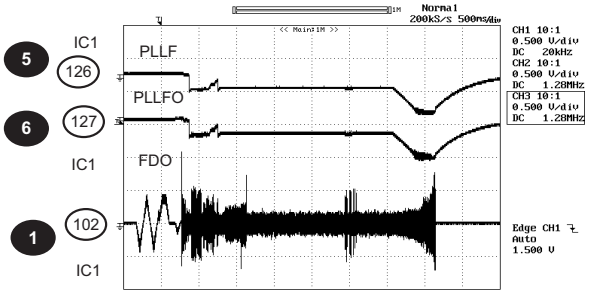

Figure 4

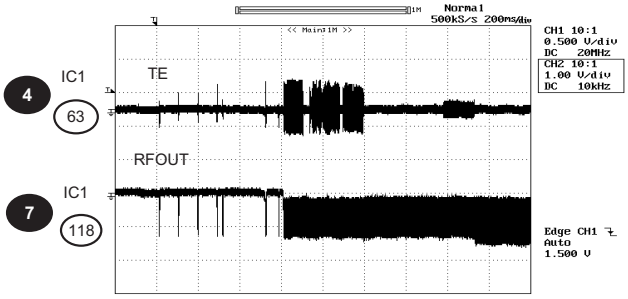

Figure 5

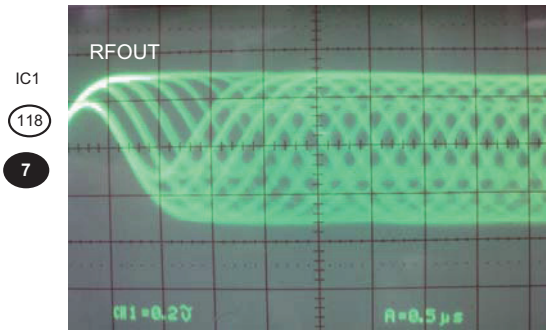

Figure 6

[2] Voltage

Main PWB

IC1							
PIN NO	VOLTAGE (V)	PIN NO	VOLTAGE (V)	PIN NO	VOLTAGE (V)	PIN NO	VOLTAGE (V)
1	1.73	33	1.68	65	33.70m	97	25.70m
2	24.00m	34	1.73	66	33.80m	98	1.73
3	1.73	35	34.90m	67	33.90m	99	1.73
4	3.43	36	34.70m	68	3.44	100	1.36
5	1.73	37	34.70m	69	3.44	101	1.73
6	24.00m	38	34.70m	70	33.80m	102	1.73
7	24.10m	39	3.08	71	3.44	103	1.73
8	24.10m	40	3.34	72	8.50m	104	1.72
9	1.62	41	3.44	73	33.80m	105	1.73
10	1.66	42	30.50m	74	3.44	106	1.73
11	3.43	43	1.22	75	3.44	107	1.73
12	3.43	44	3.42	76	3.44	108	1.74
13	1.22	45	3.42	77	1.23	109	1.74
14	3.43	46	1.17	78	30.00m	110	1.74
15	1.22	47	3.44	79	1.24	111	1.74
16	23.80m	48	1.06	80	1.23	112	18.70m
17	68.40m	49	1.08	81	1.21	113	3.43
18	25.00m	50	1.39	82	3.42	114	18.20m
19	32.30m	51	1.16	83	3.38	115	3.43
20	3.43	52	7.20m	84	3.01	116	1.71
21	34.90m	53	1.87	85	3.05	117	1.75
22	24.90m	54	1.63	86	9.10m	118	1.71
23	1.63	55	1.18	87	9.00m	119	1.82
24	1.65	56	1.58	88	9.00m	120	1.17
25	3.43	57	1.23	89	NC	121	1.22
26	25.7m	58	3.44	90	NC	122	1.19
27	1.43	59	3.44	91	NC	123	1.73
28	36.20m	60	3.44	92	NC	124	1.73
29	35.80m	61	3.41	93	NC	125	1.05
30	33.10m	62	31.20m	94	3.38	126	1.11
31	33.10m	63	31.20m	95	1.20	127	1.11
32	1.22	64	3.10	96	3.41	128	1.10

IC3			
PIN NO	VOLTAGE (V)	PIN NO	VOLTAGE (V)
1	NC	11	21.70m
2	4.34	12	3.44
3	NC	13	3.44
4	3.44	14	32.70m
5	3.44	15	NC
6	NC	16	NC
7	NC	17	NC
8	NC	18	NC
9	NC	19	NC
10	NC	20	NC

IC4	
PIN NO	VOLTAGE (V)
1	37.00m
2	4.85
3	4.85
4	1.21
5	3.10
6	1.42
7	1.54
8	3.62
9	1.70
10	1.41

IC6	
PIN NO	VOLTAGE (V)
1	44.30m
2	44.90m
3	0.77
4	1.05
5	36.40m
6	24.50m
7	41.50m
8	40.80m
9	27.40m
10	3.44

IC301							
PIN NO	VOLTAGE (V)	PIN NO	VOLTAGE (V)	PIN NO	VOLTAGE (V)	PIN NO	VOLTAGE (V)
1	1.83	17	1.87	33	1.84	49	36.20m
2	101.00m	18	49.30m	34	35.30m	50	36.40m
3	0.80	19	0.77	35	34.70m	51	60.50m
4	0.91	20	0.91	36	3.18	52	59.70m
5	87.10m	21	36.10m	37	3.20	53	33.80m
6	87.10m	22	36.00m	38	34.90m	54	3.23
7	1.91	23	36.00m	39	33.40m	55	NC
8	81.80m	24	3.21	40	33.40m	56	NC
9	3.25	25	3.12	41	33.30m	57	NC
10	1.29	26	1.72	42	33.40m	58	NC
11	3.11	27	1.67	43	34.30m	59	3.68
12	3.20	28	36.10m	44	NC	60	3.64
13	3.10	29	36.10m	45	NC	61	3.65
14	51.00m	30	35.30m	46	NC	62	3.66
15	3.17	31	1.25	47	NC	63	1.46
16	40.00m	32	47.00m	48	1.86	64	79.50m

IC550	
PIN NO	VOLTAGE (V)
1	18.20m
2	0.52
3	18.20m
4	2.39
5	16.20m
6	18.40m
7	18.40m
8	18.40m
9	25.50m
10	25.50m
11	1.07
12	18.40m
13	18.40m
14	16.40m
15	18.40m
16	11.57

IC580	
PIN NO	VOLTAGE (V)
1	10.96
2	153.50m
3	144.90m
4	18.70m
5	4.42
6	10.02
7	1.39
8	11.58

IC570	
PIN NO	VOLTAGE (V)
1	2.47
2	18.40m
3	4.91
4	3.28
5	36.00m
6	1.44
7	1.72
8	1.67
9	1.25
10	36.00m
11	36.00m
12	36.00m
13	2.46
14	2.46

IC801	
PIN NO	VOLTAGE (V)
1	2.75
2	15.20
3	18.00m
4	11.59
5	1.27

IC803	
PIN NO	VOLTAGE (V)
1	15.22
2	13.30m
3	4.91

IC900							
PIN NO	VOLTAGE (V)	PIN NO	VOLTAGE (V)	PIN NO	VOLTAGE (V)	PIN NO	VOLTAGE (V)
1	11.56	12	3.24	23	11.56	34	10.83
2	2.45	13	1.18	24	10.83	35	22.99
3	11.70m	14	1.18	25	11.60m	36	317.80m
4	38.00m	15	1.18	26	22.99	37	11.70m
5	38.20m	16	40.50m	27	22.99	38	11.70m
6	38.40m	17	40.60m	28	317.60m	39	317.80m
7	38.90m	18	40.50m	29	11.80m	40	22.99
8	40.30m	19	11.80m	30	11.80m	41	22.99
9	1.18	20	11.90m	31	317.60m	42	11.70m
10	11.90m	21	11.57	32	22.90	43	10.83
11	18.80m	22	11.56	33	10.84	44	11.56

IC600							
PIN NO	VOLTAGE (V)	PIN NO	VOLTAGE (V)	PIN NO	VOLTAGE (V)	PIN NO	VOLTAGE (V)
1	3.20	17	3.08	33	25.00m	49	3.09
2	3.20	18	3.17	34	3.43	50	3.22
3	3.11	19	50.30m	35	3.03	51	3.19
4	1.38	20	7.30m	36	3.21	52	3.19
5	0.79	21	7.30m	37	3.02	53	39.60m
6	3.05	22	11.50m	38	-	54	42.80m
7	1.65	23	7.10m	39	3.08	55	3.10
8	2.80m	24	3.53	40	3.41	56	3.00
9	1.51	25	2.54	41	3.07	57	27.80m
10	3.08	26	9.20m	42	3.09	58	21.70m
11	3.08	27	1.79	43	3.21	59	20.40m
12	3.08	28	7.80m	44	3.20	60	3.20
13	5.50m	29	7.60m	45	2.90	61	3.21
14	3.07	30	291.90m	46	2.90	62	3.10
15	4.60m	31	3.18	47	3.09	63	3.10
16	1.44	32	162.00m	48	2.99	64	2.90

IC12							
PIN NO	VOLTAGE (V)	PIN NO	VOLTAGE (V)	PIN NO	VOLTAGE (V)	PIN NO	VOLTAGE (V)
1	1.73	8	0.28m	15	2.56	22	26.00m
2	4.23	9	4.92	16	2.57	23	1.73
3	3.00	10	26.00m	17	2.56	24	4.90
4	1.73	11	2.54	18	2.55	25	4.91
5	1.25	12	3.81	19	4.92	26	1.73
6	0.28m	13	2.57	20	1.64	27	1.73
7	0.28m	14	2.54	21	2.92	28	4.94

Display PWB

IC700							
PIN NO	VOLTAGE (V)	PIN NO	VOLTAGE (V)	PIN NO	VOLTAGE (V)	PIN NO	VOLTAGE (V)
1	26.53	17	19.63	33	21.36	49	19.64
2	26.53	18	19.64	34	16.17	50	19.65
3	26.54	19	19.64	35	17.89	51	19.64
4	26.54	20	21.34	36	21.35	52	17.89
5	3.08	21	14.44	37	16.16	53	26.55
6	1.44	22	24.80	38	26.52	54	26.55
7	2.54	23	28.25	39	23.03	55	26.55
8	1.88	24	24.80	40	26.52	56	26.55
9	NC	25	16.18	41	17.89	57	26.55
10	NC	26	14.44	42	16.14	58	26.55
11	3.22	27	26.53	43	24.78	59	26.55
12	2.31	28	23.07	44	28.25	60	26.55
13	1.88	29	24.81	45	28.25	61	26.55
14	11.90m	30	14.41	46	17.88	62	26.55
15	26.54	31	14.42	47	17.90	63	26.55
16	21.54	32	19.62	48	19.64	64	26.55

-MEMO-

CHAPTER 7. DIAGRAM

[1] Block Diagram

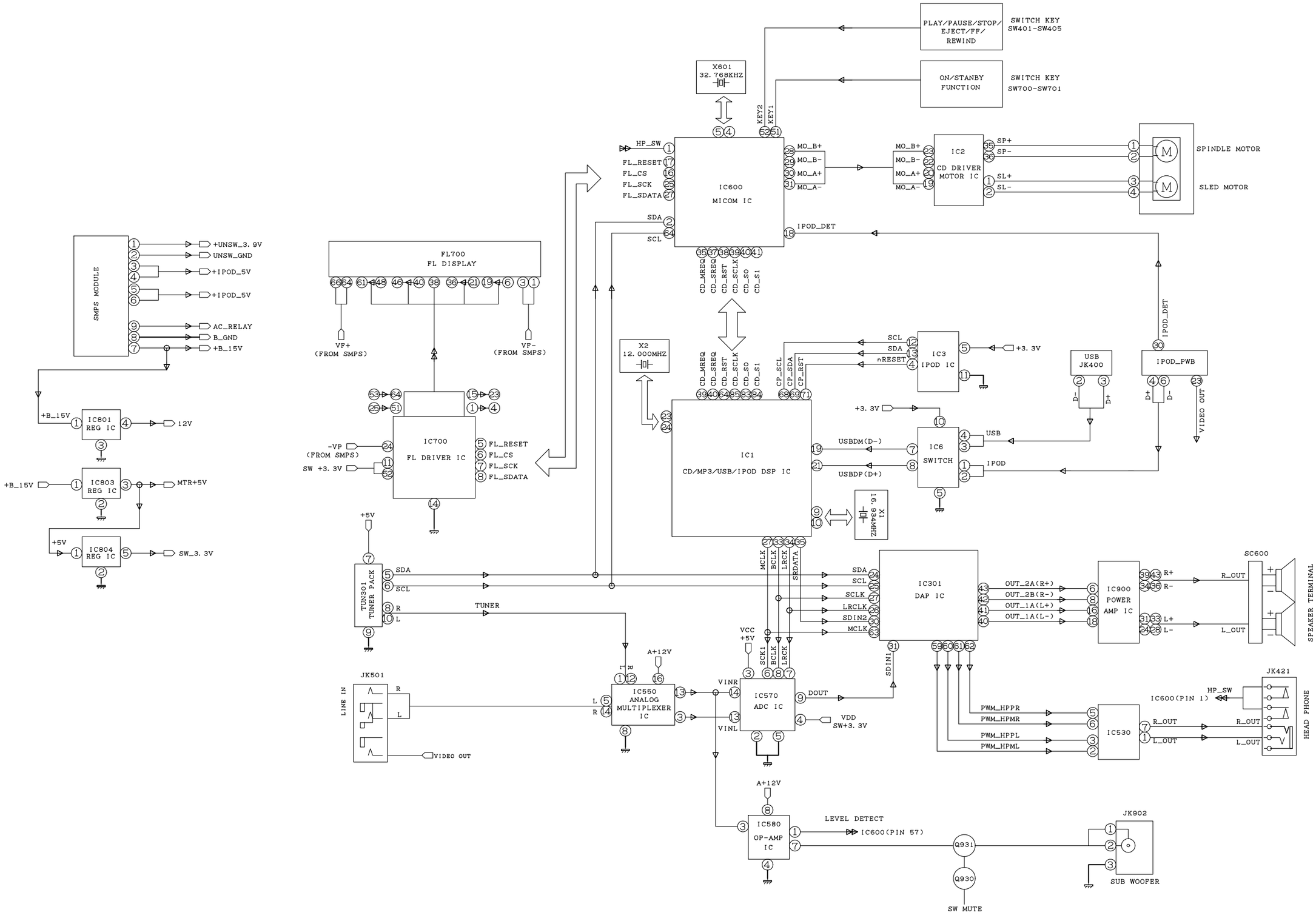

Figure 7-1: BLOCK DIAGRAM

-MEMO-

-MEMO-

CHAPTER 8. CIRCUIT SCHEMATICS AND PARTS LAYOUT

[1] Notes On Schematic Diagram

- Resistor:
  To differentiate the units of resistors, such symbol as K and M are used: the symbol K means 1000 ohm and the symbol M means 1000 kohm and the resistor without any symbol is ohm-type resistor. Besides, the one with “Fusible” is a fuse type.
- Capacitor:
  To indicate the unit of capacitor, a symbol P is used: this symbol P means pico-farad and the unit of the capacitor without such a symbol is microfarad. As to electrolytic capacitor, the expression "capacitance/withstand voltage is used".
  (CH), (TH), (RH), (UJ): Temperature compensation
  (ML): Mylar type
  (P.P.): Polypropylene type

- Schematic diagram and Wiring Side of P.W.Board for this model are subject to change for improvement without prior notice.
- The indicated voltage in each section is the one measured by Digital Multimeter between such a section and the chassis with no signal given.

  1. In the tuner section,
     indicates AM
     indicates FM stereo

  2. In the CD section, the CD is stopped.
- Parts marked with “ ⚠ ” (⊏ = = = ⊐) are important for maintaining the safety of the set. Be sure to replace these parts with specified ones for maintaining the safety and performance of the set.

REF. NO	DESCRIPTION	POSITION
VR700	VOLUME	MAX -- MIN
SW700	ON/STAND-BY	ON -- OFF
SW701	FUNCTION	ON -- OFF
SW702	PLAY/PAUSE	ON -- OFF
SW703	REWIND	ON -- OFF
SW704	FAST FORWARD	ON -- OFF
SW705	STOP	ON -- OFF
SW706	CD EJECT	ON -- OFF

[2] Types Of Transistor And LED

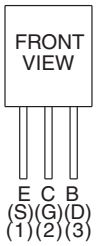

KTA1274Y
KTC3199
KTC3203Y
KTA1271Y

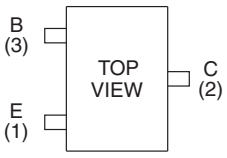

KRA102S
KRC107S
KRC104S
KTA1504GR
KTC3875GR
KRA107S
KTC2875B
KRC102S

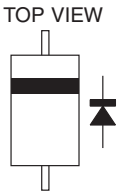

1N4004
DRL204F
MA111

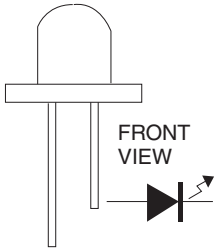

304VT2H

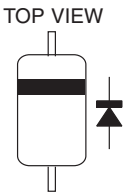

HSS4148

KIA7805A
KIA7809A
KTB772Y

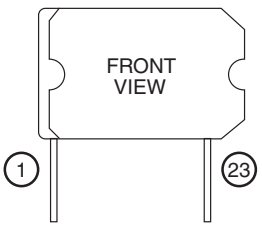

TDA8920C

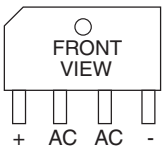

10XB60F

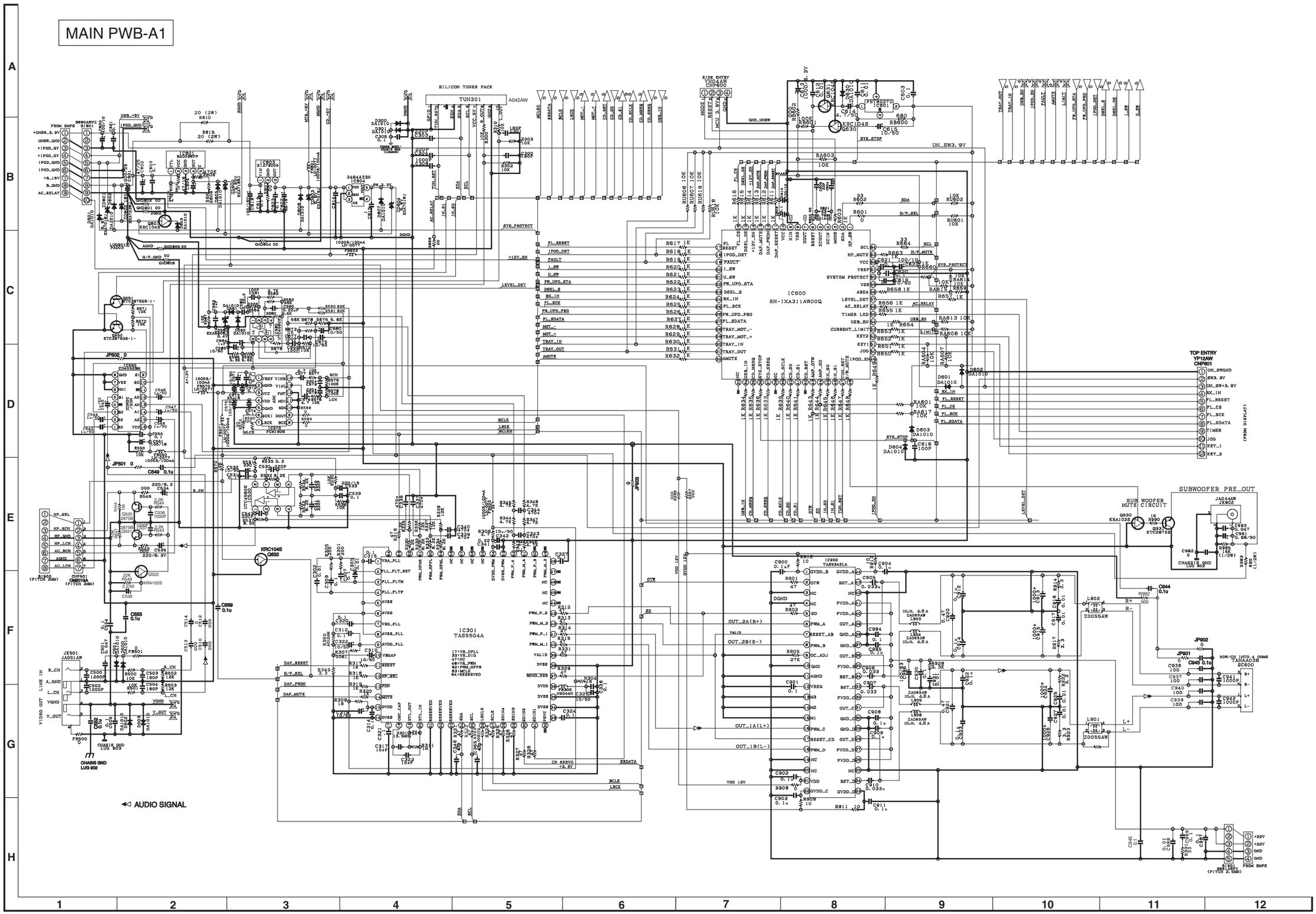

Figure 8-1: MAIN SCHEMATIC DIAGRAM

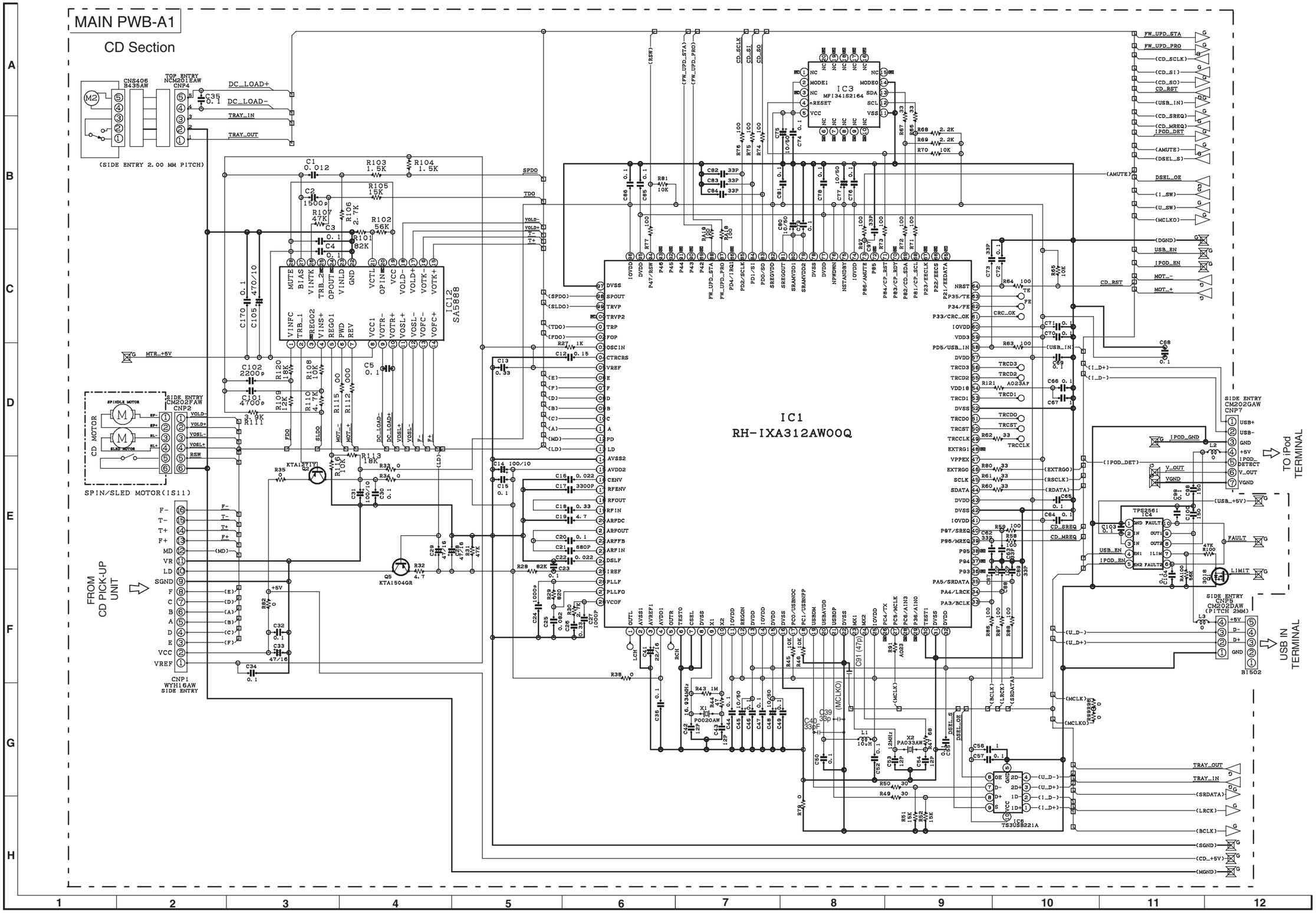

Figure 8-2: MAIN (CD) SCHEMATIC DIAGRAM

DISPLAY PWB-A2

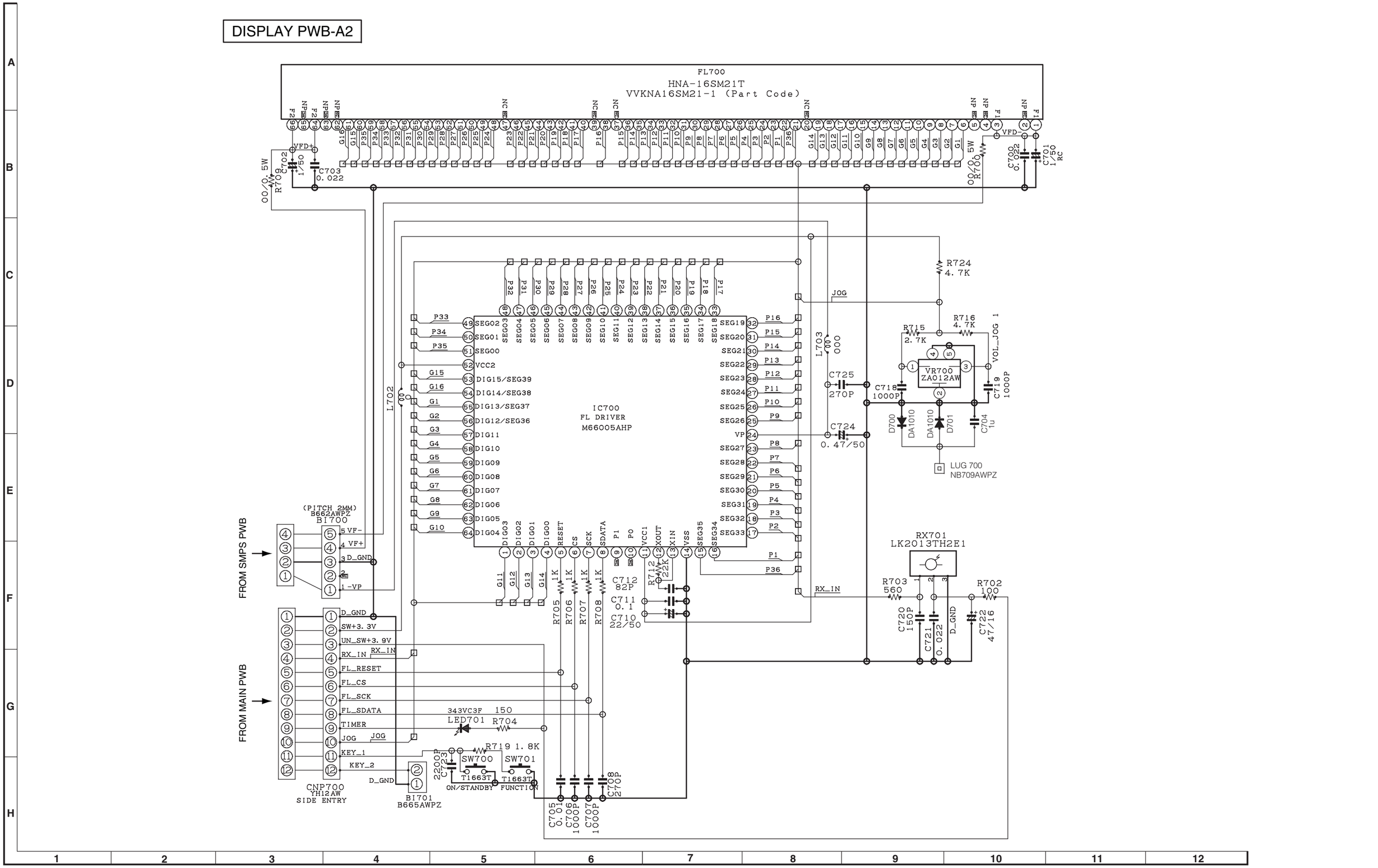

Figure 8-3: DISPLAY SCHEMATIC DIAGRAM

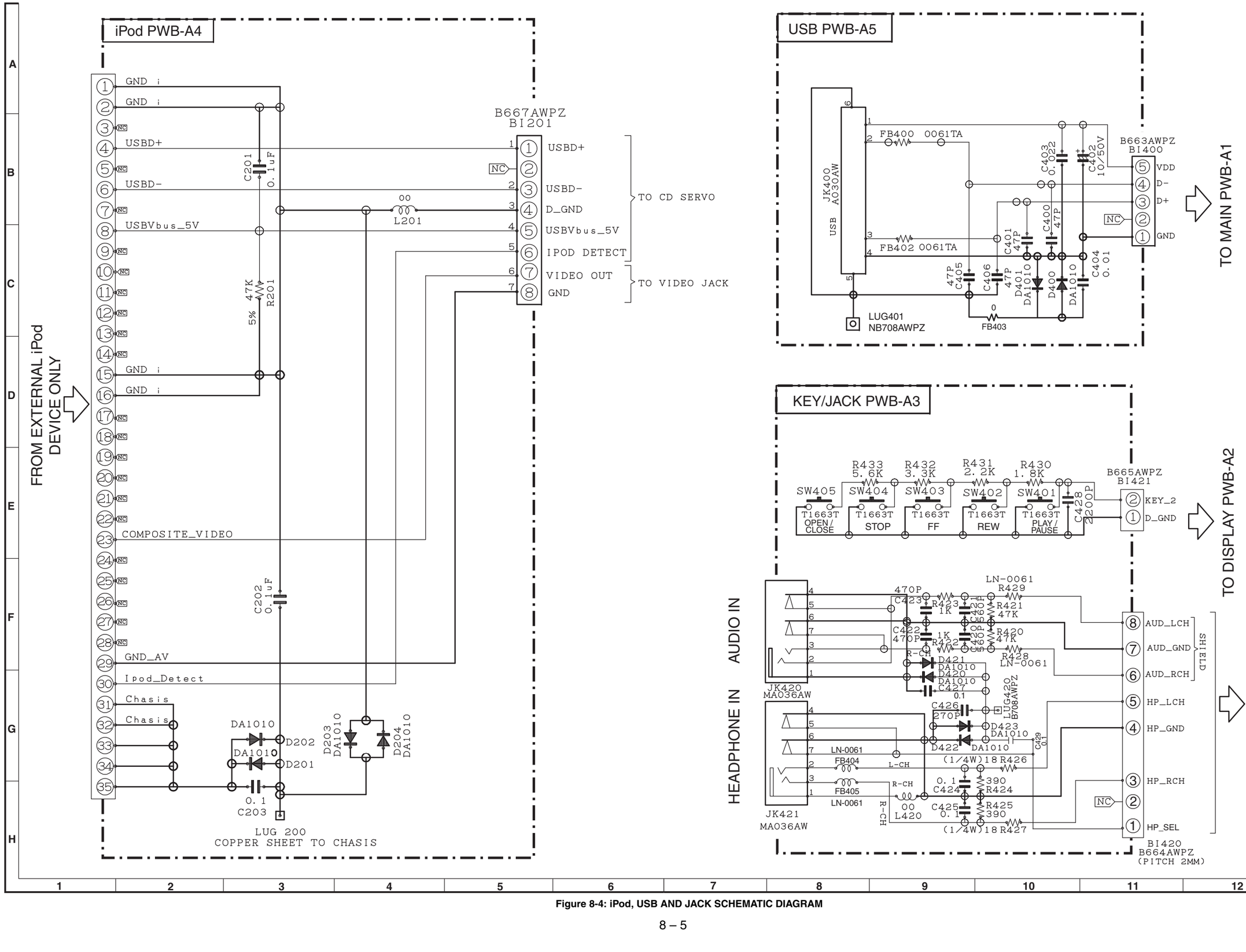

Figure 8-4: iPod, USB AND JACK SCHEMATIC DIAGRAM

[4] Chart Of Connecting Wires

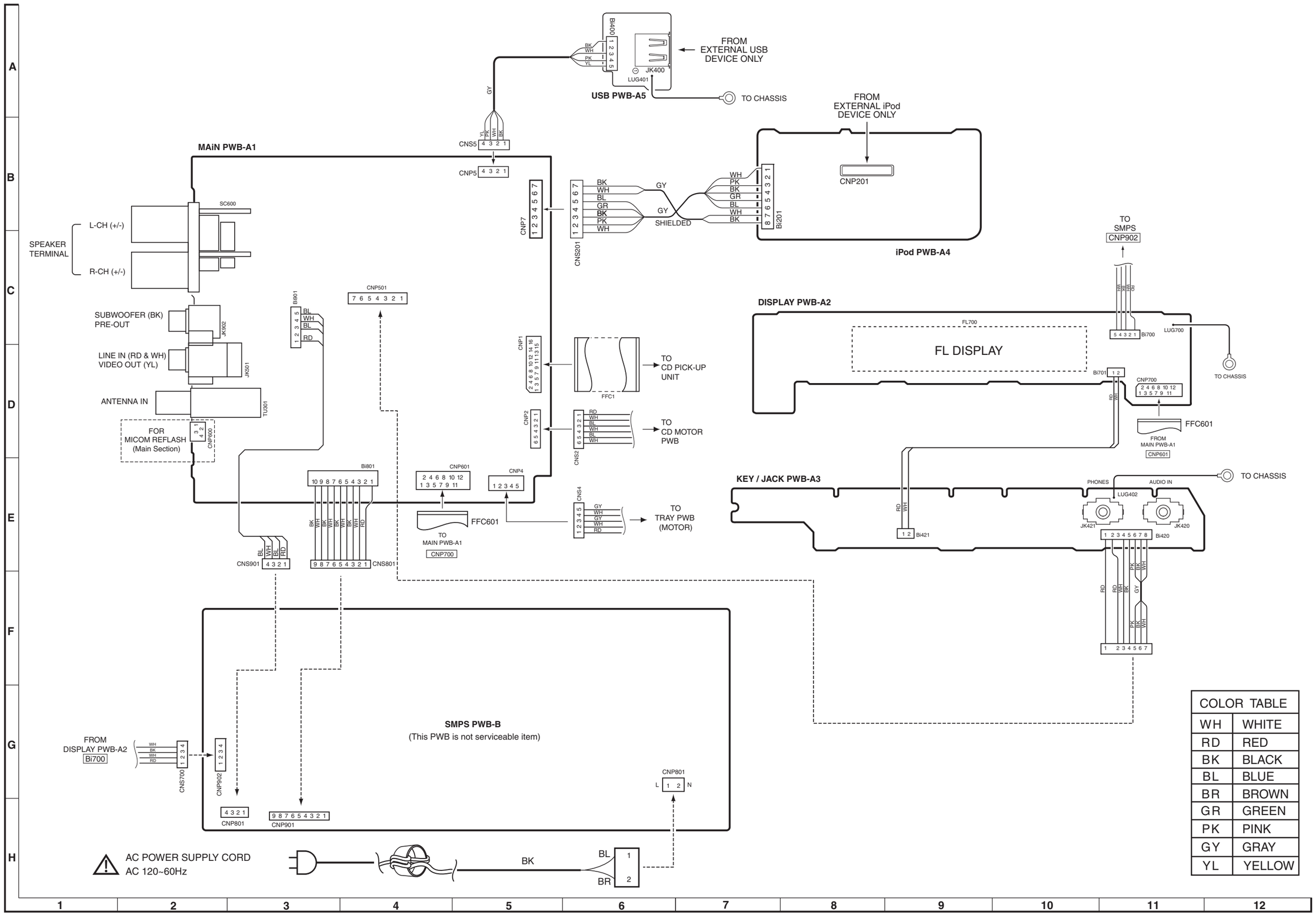

Figure 8-5: WIRING CONNECTION

[5] Wiring Side Of PWB

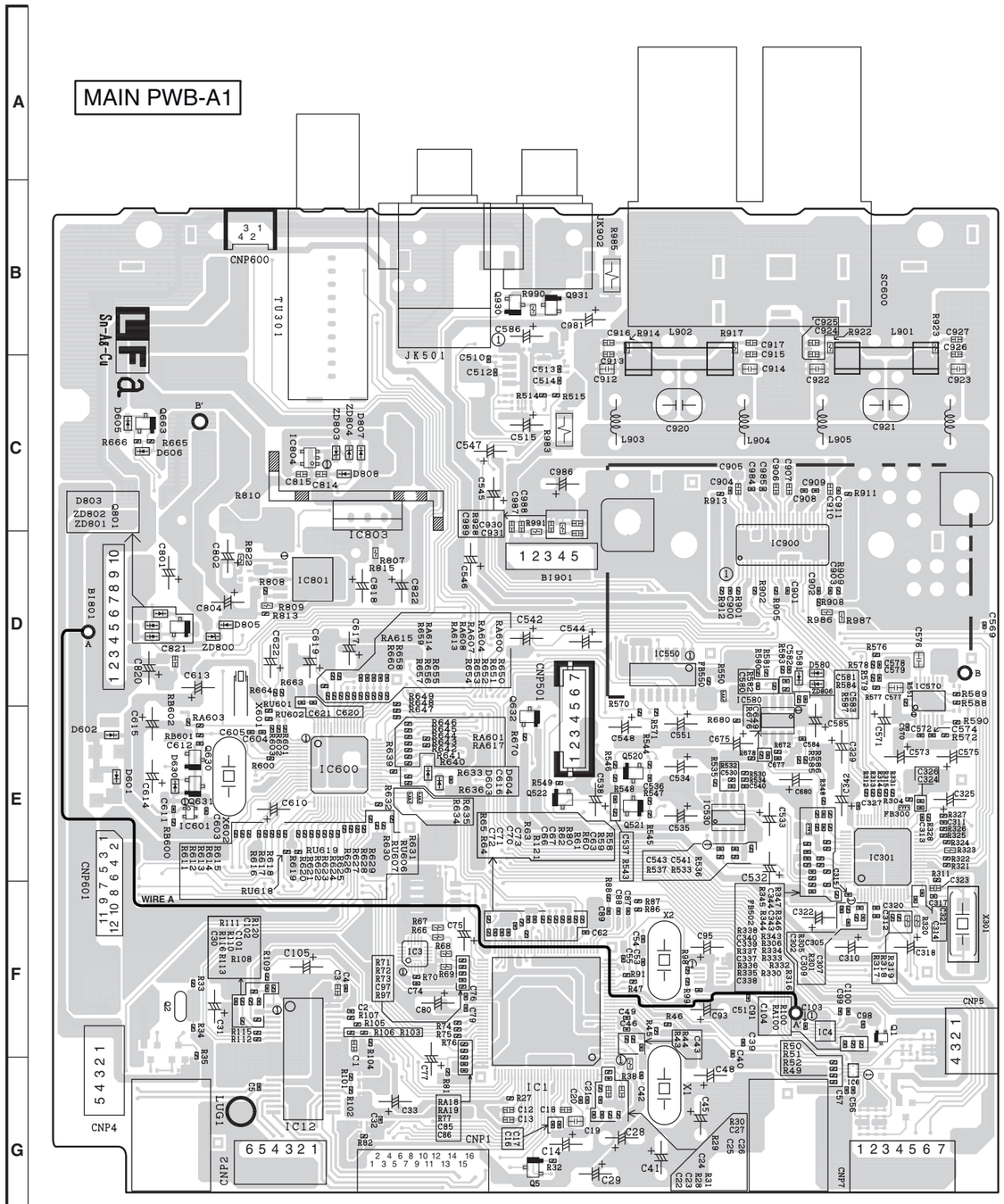

TOP VIEW

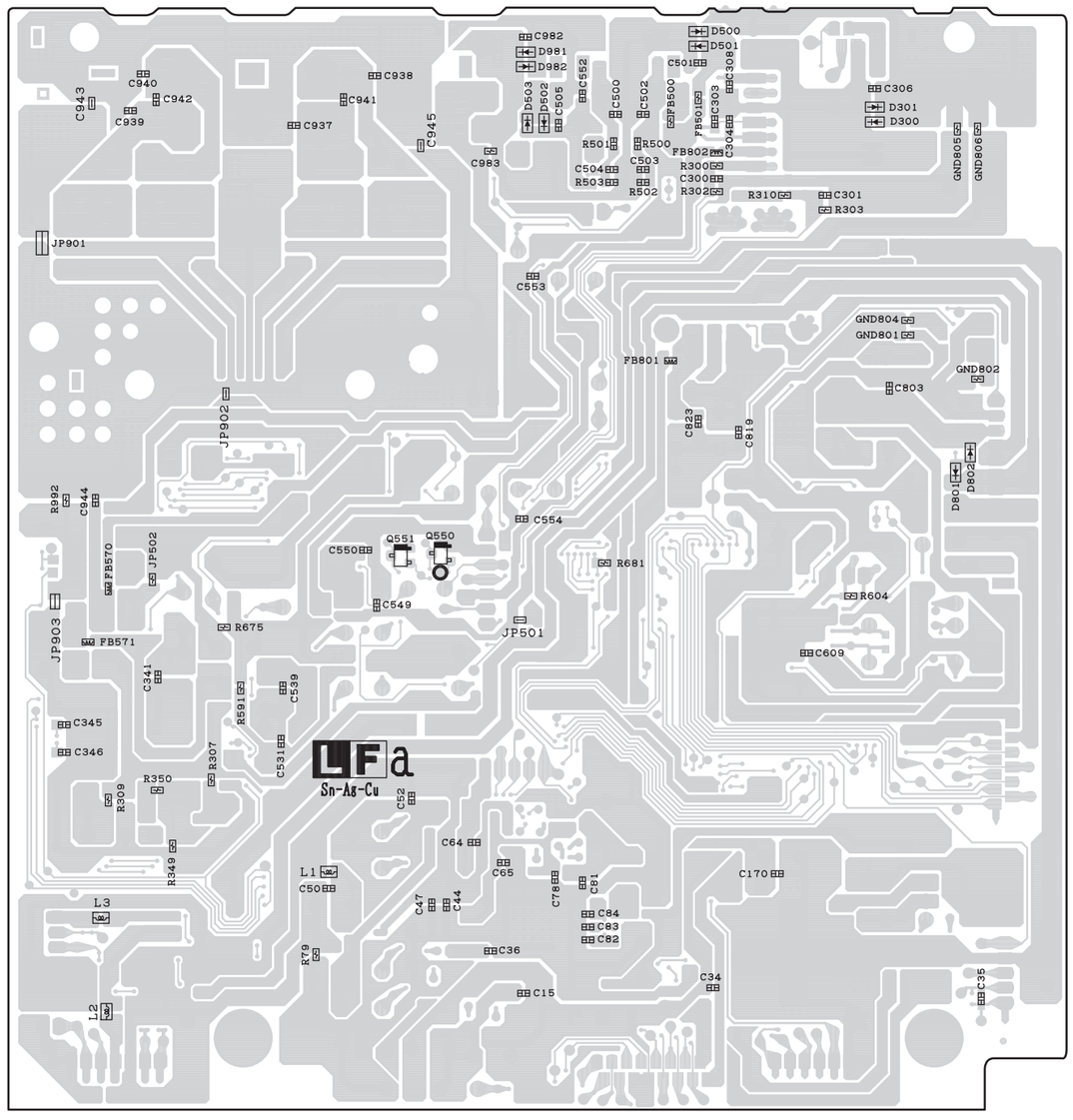

BOTTOM VIEW

Sn-Ag-Cu ← Lead-free solder indication

Lead-free solder is used in the MAIN PWB.
Refer to "Precautions for handling lead-free solder" for instructions and precautions.

Figure 8-6: WIRING SIDE OF MAIN PWB

DISPLAY PWB-A2

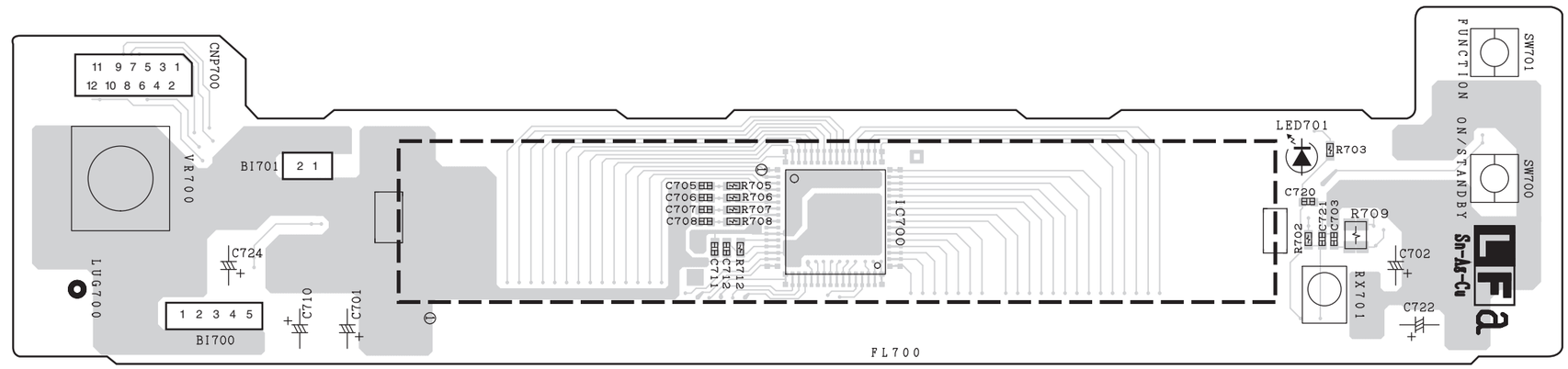

TOP VIEW

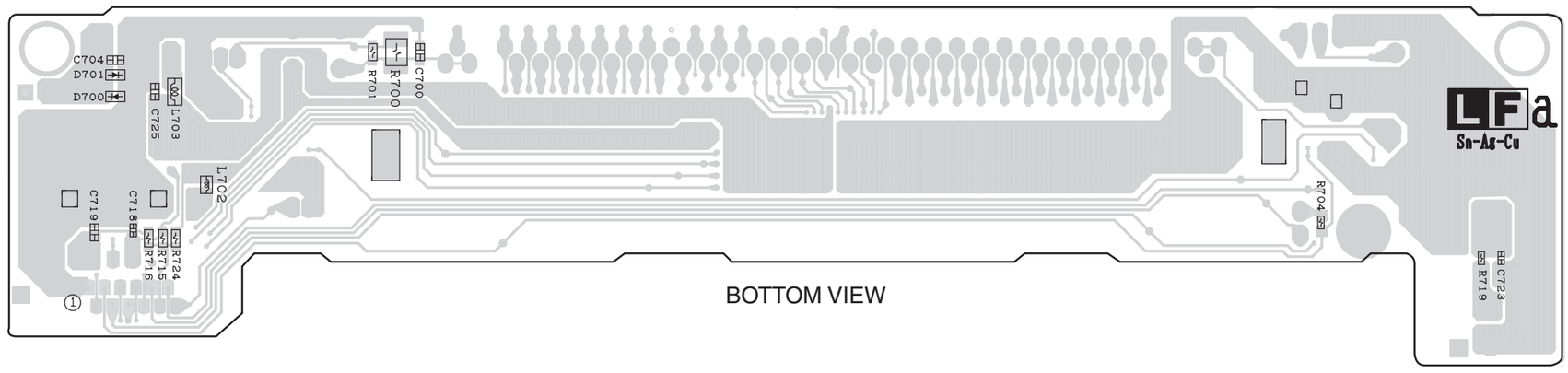

BOTTOM VIEW

Lead-free solder indication

Lead-free solder is used in the DISPLAY PWB.
Refer to "Precautions for handling lead-free solder" for instructions and precautions.

Figure 8-7: WIRING SIDE OF DISPLAY PWB

KEY / JACK PWB-A3

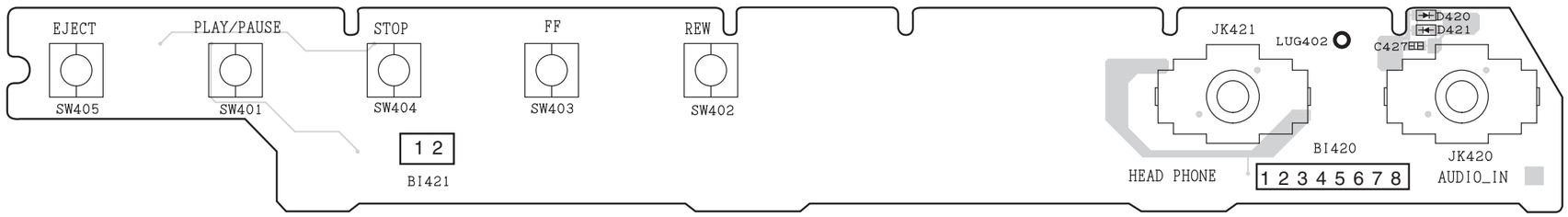

TOP VIEW

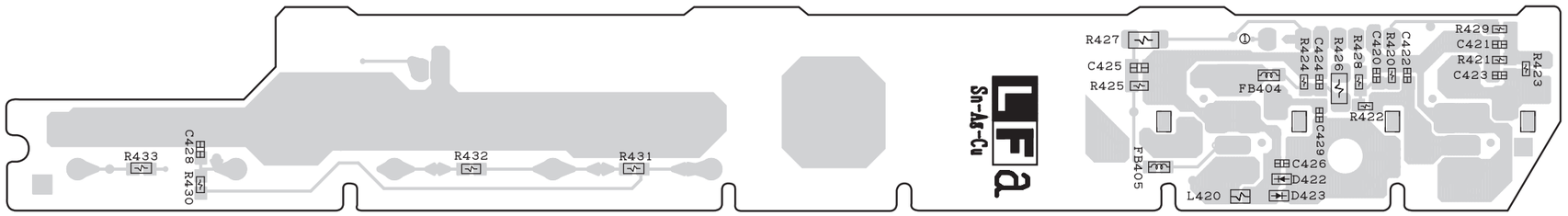

BOTTOM VIEW

Sn-Ag-Cu ← Lead-free solder indication

Lead-free solder is used in the KEY / JACK PWB.
Refer to "Precautions for handling lead-free solder" for instructions and precautions.

Figure 8-8: WIRING SIDE OF KEY / JACK PWB

iPod PWB-A4

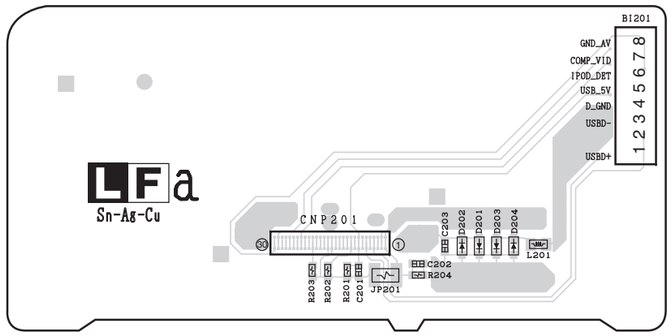

TOP VIEW

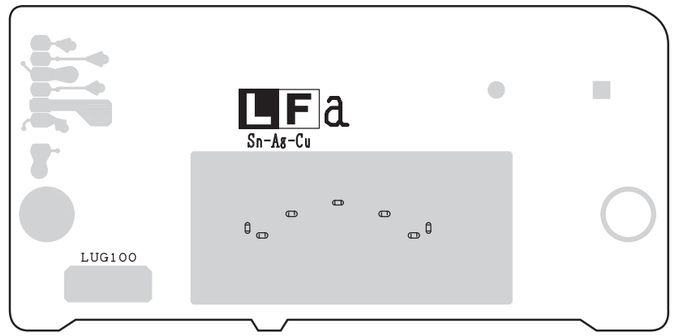

BOTTOM VIEW

Sn-Ag-Cu ← Lead-free solder indication

Lead-free solder is used in the iPod PWB.
Refer to "Precautions for handling lead-free solder" for instructions and precautions.

USB PWB-A5

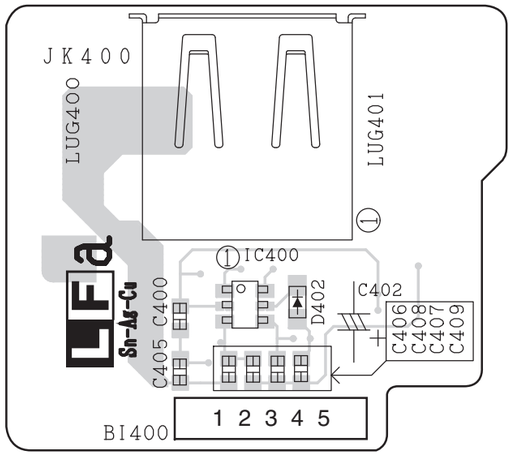

TOP VIEW

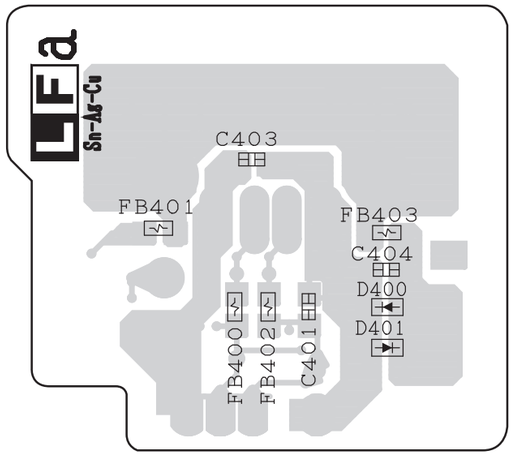

BOTTOM VIEW

Sn-Ag-Cu ← Lead-free solder indication

Lead-free solder is used in the USB PWB.
Refer to "Precautions for handling lead-free solder" for instructions and precautions.

Figure 8-9: WIRING SIDE OF iPod and USB PWB

-MEMO-

-MEMO-

SHARP PARTS GUIDE

HI FI COMPONENT SYSTEM

MODEL XL-HF201P(BK)

XL-HF201P(BK) Hi Fi Component System consisting of XL-HF201P(BK) (main unit) and CP-HF200 (speaker system).

CONTENTS

[1] INTEGRATED CIRCUITS
[2] TRANSISTORS
[3] DIODES
[4] COILS
[5] CRYSTALS / VIBRATORS
[6] CAPACITORS
[7] RESISTORS
[8] OTHER CIRCUITRY PARTS
[9] CABINET PARTS / CD MECHANISM PARTS
[10] SPEAKER BOX PARTS
[11] ACCESSORIES / PACKING PARTS
[12] P.W.B. ASSEMBLY
[13] OTHER SERVICE PARTS

Explanation of capacitors/resistors parts codes

Capacitors

VCC ..... Ceramic type
VCK..... Ceramic type
VCT ..... Semiconductor type
VC • • MF ..... Cylindrical type (without lead wire)
VC • • MN..... Cylindrical type (without lead wire)
VC • • TV..... Square type (without lead wire)
VC • • TQ ..... Square type (without lead wire)
VC • • CY ..... Square type (without lead wire)
VC • • CZ ..... Square type (without lead wire)
VC • • • • • • • • • J .. The 13th character represents capacity difference.
("J" ±5%, "K" ±10%, "M" ±20%, "N" ±30%,
"C" ±0.25 pF, "D" ±0.5 pF, "Z" +80-20%.)

If there are no indications for the electrolytic capacitors, error is ±20%.

Resistors

VRD ..... Carbon-film type
VRS..... Carbon-film type
VRN ..... Metal-film type
VR • • MF ..... Cylindrical type (without lead wire)
VR • • MN..... Cylindrical type (without lead wire)
VR • • TV..... Square type (without lead wire)
VR • • TQ ..... Square type (without lead wire)
VR • • CY ..... Square type (without lead wire)
VR • • CZ ..... Square type (without lead wire)
VR • • • • • • • • • J .. The 13th character represents error.
("J" ±5%, "F" ±1%, "D" ±0.5%.)

If there are no indications for other parts, the resistors are ±5% carbon-film type.

Explanation of PWB Assembly parts code category

S Category -- Repair (Component parts of PWB can be replace and repair, PWB no supply)
X Category -- Replacement (PWB can not be repair. Component parts no supply)
S.X Category -- Repair and Replacement (PWB can repair and replace)
KG Category -- Revolve repair by Business Center (Return to Business Center and repair by manufacturer. Component parts no supply)

Parts marked with "⚠" are important for maintaining the safety of the set. Be sure to replace these parts with specified ones for maintaining the safety and performance of the set.

SHARP CORPORATION

This document has been published to be used for after sales service only.
The contents are subject to change without notice.

NO.	PARTS CODE	PRICE RANK	NEW MARK	PART RANK	DESCRIPTION
[1] INTEGRATED CIRCUITS					
iC1	RH-iXA312AW00	BA			CD DSP, MN66F27946, 64 Pin
iC3	VHi341S2162-1				Apple Authentication IC
iC4	VHiTPS2561D-1	AH			CRT Limiter Power Switch
iC6	VHiTS3USB++-1	AG			USB Switch
iC12	VHiSA5888TR-1	AG			CD Driver, SA5888, 28 Pin
iC301	VHiTAS5504A-1	AR			Digital Audio PWM
iC530	VHiUTC4580E-1	AC			Dual Operational Amplifier
iC550	VHiCD4052BM-1	AE			Analog Multi / Demultiplexer
iC530	VHiPCM1808P-1	AH			Single Ended Analog
iC580	VHiUTC4580E-1	AC			Dual Operational Amplifier
iC600	RH-iXA311AW00	AV			System Microcomputer,iXA311AW
iC601	VHiPST8227U-1	AC			Reset IC, 2.7V
iC700	VHiM66005AHP1	AS			FL Driver
iC801	VHiBA00BWFP-1	AG			Voltage Regulator
iC803	VHiKiA7805AP1	AC			Voltage Regulator
iC804	VHi3464A33N-1	AC			Voltage Regulator, 3.3V
iC900	VHiTAS5342L-1	AR			Digital Amplifier
[2] TRANSISTORS					
Q1	VS2SK3018//-1	AC			N Channel SK3018
Q2	VSKTA1271Y/-1	AC			Silicon,PNP,KTA1271 Y
Q5	VSKTA1504GR-1	AB			Silicon,PNP,KTA1504 GR
Q520	VSKTC2875B/-1	AC			Silicon,NPN,KTC2875 B
Q521	VSKTC2875B/-1	AC			Silicon,NPN,KTC2875 B
Q522	VSKRA102S//-1	AB			Digital,PNP,KRA102 S
Q550	VSKTC3875GR-1	AB			Silicon,NPN,KTC3875 GR
Q551	VSKTC3875GR-1	AB			Silicon,NPN,KTC3875 GR
Q630	VSKRC104S//-1	AC			Digital,NPN,KRC104 S
Q631	VSKRC104S//-1	AC			Digital,NPN,KRC104 S
Q632	VSKRC104S//-1	AC			Digital,NPN,KRC104 S
Q801	VSKRC104S//-1	AC			Digital,NPN,KRC104 S
Q930	VSKRA102S//-1	AB			Digital,PNP,KRA102 S
Q931	VSKTC2875B/-1	AC			Silicon,NPN,KTC2875 B
[3] DIODES					
D201	VHDDA1010++-1	AB			Silicon,DA1010
D202	VHDDA1010++-1	AB			Silicon,DA1010
D203	VHDDA1010++-1	AB			Silicon,DA1010
D204	VHDDA1010++-1	AB			Silicon,DA1010
D300	VHDDA1010++-1	AB			Silicon,DA1010
D301	VHDDA1010++-1	AB			Silicon,DA1010
D400	VHDDA1010++-1	AB			Silicon,DA1010
D401	VHDDA1010++-1	AB			Silicon,DA1010
D402	VHDDA1010++-1	AB			Silicon,DA1010
D420	VHDDA1010++-1	AB			Silicon,DA1010
D421	VHDDA1010++-1	AB			Silicon,DA1010
D422	VHDDA1010++-1	AB			Silicon,DA1010
D423	VHDDA1010++-1	AB			Silicon,DA1010
D500	VHDDA1010++-1	AB			Silicon,DA1010
D501	VHDDA1010++-1	AB			Silicon,DA1010
D502	VHDDA1010++-1	AB			Silicon,DA1010
D503	VHDDA1010++-1	AB			Silicon,DA1010
D580	VHDDA1010++-1	AB			Silicon,DA1010
D581	VHDDA1010++-1	AB			Silicon,DA1010
D601	VHDDA1010++-1	AB			Silicon,DA1010
D602	VHDDA1010++-1	AB			Silicon,DA1010
D603	VHDDA1010++-1	AB			Silicon,DA1010
D604	VHDDA1010++-1	AB			Silicon,DA1010
D630	VHDDA1010++-1	AB			Silicon,DA1010
D700	VHDDA1010++-1	AB			Silicon,DA1010
D701	VHDDA1010++-1	AB			Silicon,DA1010
D801	VHDDA1010++-1	AB			Silicon,DA1010
D802	VHDDA1010++-1	AB			Silicon,DA1010
D803	VHDDA1010++-1	AB			Silicon,DA1010
D805	VHDDA1010++-1	AB			Silicon,DA1010
D807	VHDDA1010++-1	AB			Silicon,DA1010
D808	VHDDA1010++-1	AB			Silicon,DA1010
LED701	VHPSLR343VC3F	AC			LED,Red
ZD800	RH-EXA718WJQZ	AB			Zener
ZD801	RH-EXA701WJQZ	AB			Zener,6.8V
ZD802	RH-EXA723WJQZ	AB			Zener,18V
ZD803	RH-EXA701WJQZ	AB			Zener,6.8V
ZD804	RH-EXA701WJQZ	AB			Zener,6.8V
ZD806	RH-EXA680WJQZ	AB			Zener, 2.4V
[4] COILS					
FB300	RFiLN5044NCPZ	AB			Ferrite Bead
FB400	RBLN-0061TAZZ	AB			Chip Ferrite Core
FB402	RBLN-0061TAZZ	AB			Chip Ferrite Core
FB404	RBLN-0061TAZZ	AB			Chip Ferrite Core
FB405	RBLN-0061TAZZ	AB			Chip Ferrite Core
FB502	RBLN-0077TAZZ	AB			Chip Ferrite Core
FB550	RBLN-0077TAZZ	AB			Chip Ferrite Core
FB570	RBLN-0077TAZZ	AB			Chip Ferrite Core
FB571	RBLN-0077TAZZ	AB			Chip Ferrite Core
FB801	RBLN-0077TAZZ	AB			Chip Ferrite Core
FB802	RBLN-0077TAZZ	AB			Chip Ferrite Core

NO.	PARTS CODE	PRICE RANK	NEW MARK	PART RANK	DESCRIPTION
[4] COILS					
L1	VPBNN100K0000	AC			Coil, 10µH
L901	RCiLZ0055AWZZ	AH			Coil
L902	RCiLZ0055AWZZ	AH			Coil
L903	RCiLZA089AWZZ				Coil, 10µH
L904	RCiLZA089AWZZ				Coil, 10µH
L905	RCiLZA089AWZZ				Coil, 10µH
L906	RCiLZA089AWZZ				Coil, 10µH
RF1	RCORFA026AWZZ	AG			Core
R91	RFiLNA023AFZZ	AB			Chip Ferrite Core
R121	RFiLNA023AFZZ	AB			Chip Ferrite Core
R307	RBLN-0061TAZZ	AB			Chip Ferrite Core
R323	RBLN-0081TAZZ	AB			Chip Ferrite Core
R350	RBLN-A012AWZZ	AB			Chip Ferrite Core
R428	RBLN-0061TAZZ	AB			Chip Ferrite Core
R429	RBLN-0061TAZZ	AB			Chip Ferrite Core
[5] CRYSTALS / VIBRATORS					
X1	RCRSP0020AWZZ	AG			Crystal, 16.93 MHz
X2	RCRSPA033AWZZ	AD			Crystal, 12.00 MHz
X301	RCRSPA030AWZZ	AD			Crystal, 13.50 MHz
X601	RCRSPA014AWZZ	AE			Crystal, 32.768 KHz
[6] CAPACITORS					
C1	VCKYCY1HB123K	AB			0.012 µF,50V
C2	VCKYCZ1HB152K	AA			1500 pF,50V
C3	VCKYCZ1EF104Z	AA			0.1 µF,25V
C4	VCKYCY1EF104Z	AA			0.1 µF,25V
C5	VCKYCZ1EF104Z	AA			0.1 µF,25V
C12	VCKYCY1CB154K	AB			0.15 µF,16V
C13	VCKYCY1CF334Z	AA			0.33 µF,16V
C14	VCEAZA1AW107M	AB			100 µF,10V,Electrolytic
C15	VCKYCY1EF104Z	AA			0.1 µF,25V
C16	VCKYCZ1CB223K	AB			0.022 µF,16V
C17	VCKYCZ1HB332K	AA			3300 pF,50V
C18	VCKYCY1CF334Z	AA			0.33 µF,16V
C19	VCKYTV1EB475K	AB			4.7 µF,25V
C20	VCKYCZ1AB104K	AB			0.1 µF,10V
C21	VCKYCZ1HB681K	AB			680 pF,50V
C22	VCKYCZ1CB223K	AB			0.022 µF,16V
C23	VCKYCZ1AB104K	AB			0.1 µF,10V
C24	VCKYCZ1HB102K	AB			1000 pF,50V
C25	VCKYCY1CB823K	AB			0.082 µF,16V
C26	VCKYCY1CF334Z	AA			0.33 µF,16V
C27	VCKYCZ1HB102K	AB			1000 pF,50V
C28	VCEAZA1CW476M	AB			47 µF,16V,Electrolytic
C29	VCEAZA1CW476M	AB			47 µF,16V,Electrolytic
C30	VCKYCZ1AB104K	AB			0.1 µF,10V
C31	VCEAZA1AW107M	AB			100 µF,10V,Electrolytic
C32	VCKYCZ1AB104K	AB			0.1 µF,10V
C33	VCEAZA1CW476M	AB			47 µF,16V,Electrolytic
C34	VCKYCY1EF104Z	AA			0.1 µF,25V
C35	VCKYCY1EF104Z	AA			0.1 µF,25V
C36	VCKYCY1EF104Z	AA			0.1 µF,25V
C39	VCCCCZ1HH330J	AB			33 pF,50V
C40	VCCCCZ1HH330J	AB			33 pF,50V
C41	VCEAZA1CW226M	AC			22 µF,16V,Electrolytic
C42	VCCCCZ1HH120J	AA			12 pF,50V
C43	VCCCCZ1HH120J	AA			12 pF,50V
C44	VCKYCY1EF104Z	AA			0.1 µF,25V
C45	VCEAZA1HW106M	AB			10 µF,50V,Electrolytic
C46	VCKYCZ1AB104K	AB			0.1 µF,10V
C47	VCKYCY1EF104Z	AA			0.1 µF,25V
C48	VCEAZA1HW106M	AB			10 µF,50V,Electrolytic
C49	VCKYCZ1AB104K	AB			0.1 µF,10V
C50	VCKYCY1EF104Z	AA			0.1 µF,25V
C52	VCKYCY1EF104Z	AA			0.1 µF,25V
C53	VCCCCZ1HH330J	AB			33 pF,50V
C54	VCCCCZ1HH330J	AB			33 pF,50V
C55	VCKYCZ1AB104K	AB			0.1 µF,10V
C56	VCKYCZ1AB105K	AA			1 µF,10V
C57	VCKYCZ1AB104K	AB			0.1 µF,10V
C62	VCCCCZ1HH330J	AB			33 pF,50V
C63	VCCCCZ1HH330J	AB			33 pF,50V
C64	VCKYCY1EF104Z	AA			0.1 µF,25V
C65	VCKYCY1EF104Z	AA			0.1 µF,25V
C66	VCKYCZ1AB104K	AB			0.1 µF,10V
C67	VCKYCZ1AB105K	AA			1 µF,10V
C68	VCKYCY1EF104Z	AA			0.1 µF,25V
C69	VCKYCY1EF104Z	AA			0.1 µF,25V
C70	VCKYCZ1AB104K	AB			0.1 µF,10V
C71	VCKYCZ1AB104K	AB			0.1 µF,10V
C72	VCKYCZ1AB104K	AB			0.1 µF,10V
C73	VCCCCZ1HH330J	AB			33 pF,50V
C74	VCKYCZ1AB104K	AB			0.1 µF,10V
C75	VCEAZA1HW106M	AB			10 µF,50V,Electrolytic
C76	VCKYCZ1AB104K	AB			0.1 µF,10V
C77	VCEAZA1HW106M	AB			10 µF,50V,Electrolytic
C78	VCKYCY1EF104Z	AA			0.1 µF,25V

NO.	PARTS CODE	PRICE RANK	NEW MARK	PART RANK	DESCRIPTION
[6] CAPACITORS					
C79	VCKYCZ1AB104K	AB			0.1 µF,10V
C80	VCEAZA1HW106M	AB			10 µF,50V,Electrolytic
C81	VCKYCY1EF104Z	AA			0.1 µF,25V
C82	VCCCCY1HH330J	AA			33 pF(CH),50V
C83	VCCCCY1HH330J	AA			33 pF(CH),50V
C84	VCCCCY1HH330J	AA			33 pF(CH),50V
C85	VCKYCZ1AB104K	AB			0.1 µF,10V
C86	VCKYCZ1AB104K	AB			0.1 µF,10V
C87	VCCCCZ1HH100D	AA			10 pF(CH),50V
C88	VCCCCZ1HH100D	AA			10 pF(CH),50V
C89	VCCCCZ1HH330J	AB			33 pF,50V
C91	VCCCCZ1HH470J	AB			47 pF(CH),50V
C97	VCCCCZ1HH330J	AB			33 pF,50V
C98	VCCCCZ1HH151J	AB			150 pF(CH),50V
C99	VCKYCZ1AB104K	AB			0.1 µF,10V
C100	VCCCCZ1HH151J	AB			150 pF(CH),50V
C101	VCKYCZ1EB472K	AB			4700 pF,25V
C102	VCKYCZ1HB222K	AB			2200 pF,50V
C103	VCKYCZ1AB104K	AB			0.1 µF,10V
C104	VCKYCZ1AB104K	AB			0.1 µF,10V
C105	VCEAZA1AW477M	AC			470 µF,10V,Electrolytic
C170	VCKYCY1EF104Z	AA			0.1 µF,25V
C201	VCKYCY1EF104Z	AA			0.1 µF,25V
C202	VCKYCY1EF104Z	AA			0.1 µF,25V
C203	VCKYCY1EF104Z	AA			0.1 µF,25V
C300	VCCCCY1HH181J	AA			180 pF(CH),50V
C301	VCCCCY1HH181J	AA			180 pF(CH),50V
C302	VCKYCZ1HB103K	AA			0.01 µF,50V
C303	VCKYCY1HB221K	AA			220 pF,50V
C304	VCKYCY1HB221K	AA			220 pF,50V
C305	VCKYCZ1HB103K	AA			0.01 µF,50V
C306	VCKYCY1EF104Z	AA			0.1 µF,25V
C307	VCKYCZ1AB104K	AB			0.1 µF,10V
C308	VCCCCY1HH102J	AA			1000 pF(CH),50V
C309	VCKYCZ1AB104K	AB			0.1 µF,10V
C310	VCEAZA1HW106M	AB			10 µF,50V,Electrolytic
C312	VCKYCZ1AB104K	AB			0.1 µF,10V
C314	VCKYCZ1AB104K	AB			0.1 µF,10V
C315	VCKYCZ1AB104K	AB			0.1 µF,10V
C317	VCCCCZ1HH300J	AB			30 pF(CH),50V
C318	VCEAZA1HW106M	AB			10 µF,50V,Electrolytic
C320	VCKYCZ1AB104K	AB			0.1 µF,10V
C321	VCKYCZ1AB104K	AB			0.1 µF,10V
C322	VCEAZA1HW106M	AB			10 µF,50V,Electrolytic
C323	VCCCCY1HH300J	AA			30 pF(CH),50V
C324	VCKYCZ1AB104K	AB			0.1 µF,10V
C325	VCEAZA1HW106M	AB			10 µF,50V,Electrolytic
C326	VCKYCZ1AB104K	AB			0.1 µF,10V
C327	VCKYCZ1AB104K	AB			0.1 µF,10V
C337	VCCCCZ1HH471J	AA			470 pF,50V
C338	VCCCCZ1HH471J	AA			470 pF,50V
C339	VCCCCZ1HH471J	AA			470 pF,50V
C340	VCCCCZ1HH471J	AA			470 pF,50V
C341	VCKYCY1AB224K	AB			0.22 µF,10V
C342	VCEAZA1HW106M	AB			10 µF,50V,Electrolytic
C343	VCCCCZ1HH471J	AA			470 pF,50V
C344	VCCCCZ1HH471J	AA			470 pF,50V
C345	VCCCCY1HH471J	AA			470 pF(CH),50V
C346	VCCCCY1HH471J	AA			470 pF(CH),50V
C400	VCCCCY1HH470J	AA			47 pF(CH),50V
C401	VCCCCY1HH471J	AA			470 pF(CH),50V
C402	VCEAZA1HW106M	AB			10 µF,50V,Electrolytic
C403	VCKYCY1CB223K	AA			0.022 µF,16V
C404	VCKYCY1HB103K	AA			0.01 µF,50V
C405	VCCCCY1HH470J	AA			47 pF(CH),50V
C406	VCCCCY1HH470J	AA			47 pF(CH),50V
C420	VCKYCY1HB561K	AA			560 pF,50V
C421	VCKYCY1HB561K	AA			560 pF,50V
C422	VCCCCY1HH471J	AA			470 pF(CH),50V
C423	VCCCCY1HH471J	AA			470 pF(CH),50V
C424	VCKYCY1EF104Z	AA			0.1 µF,25V
C425	VCKYCY1EF104Z	AA			0.1 µF,25V
C426	VCKYCY1EF104Z	AA			0.1 µF,25V
C427	VCKYCY1EF104Z	AA			0.1 µF,25V
C428	VCCCCY1HH222J	AB			2200 pF(CH),50V
C429	VCKYCY1EF104Z	AA			0.1 µF,25V
C500	VCKYCY1HB122K	AA			1200 pF,50V
C501	VCKYCY1HB473K	AB			0.047 µF,50V
C502	VCKYCY1HB122K	AA			1200 pF,50V
C503	VCCCCY1HH181J	AA			180 pF(CH),50V
C504	VCCCCY1HH181J	AA			180 pF(CH),50V
C505	VCKYCY1EF104Z	AA			0.1 µF,25V
C530	VCCCCZ1HH221J	AB			220 pF,50V
C531	VCKYCY1EF104Z	AA			0.1 µF,25V
C532	VCEAZA1HW106M	AB			10 µF,50V,Electrolytic
C533	VCEAZA1CW227M	AC			220 µF,16V,Electrolytic
C534	VCEAZA0JW227M	AC			220 µF,6.3V,Electrolytic
C535	VCEAZA0JW227M	AC			220 µF,6.3V,Electrolytic
C536	VCKYCZ1HB102K	AB			1000 pF,50V

NO.	PARTS CODE	PRICE RANK	NEW MARK	PART RANK	DESCRIPTION
[6] CAPACITORS					
C537	VCKYCZ1HB102K	AB			1000 pF,50V
C538	VCEAZA1HW225M	AB			2.2 µF,50V,Electrolytic
C539	VCKYCY1EF104Z	AA			0.1 µF,25V
C540	VCCCCZ1HH221J	AB			220 pF,50V
C541	VCCCCZ1HH221J	AB			220 pF,50V
C542	VCEAZA1HW105M	AB			1 µF,50V,Electrolytic
C543	VCCCCZ1HH221J	AB			220 pF,50V
C544	VCEAZA1HW105M	AB			1 µF,50V,Electrolytic
C545	VCEAZA1HW105M	AB			1 µF,50V,Electrolytic
C546	VCEAZA1HW105M	AB			1 µF,50V,Electrolytic
C547	VCEAZA1HW105M	AB			1 µF,50V,Electrolytic
C548	VCEAZA1HW105M	AB			1 µF,50V,Electrolytic
C549	VCKYCY1EF104Z	AA			0.1 µF,25V
C550	VCKYCY1EF104Z	AA			0.1 µF,25V
C551	VCEAZA1CW107M	AC			100 µF,50V,Electrolytic
C552	VCKYCY1EF104Z	AA			0.1 µF,25V
C553	VCKYCY1EF104Z	AA			0.1 µF,25V
C554	VCKYCY1EF104Z	AA			0.1 µF,25V
C569	VCKYCZ1EF104Z	AA			0.1 µF,25V
C570	VCKYCZ1EF104Z	AA			0.1 µF,25V
C571	VCEAZA1HW106M	AB			10 µF,50V,Electrolytic
C572	VCKYCZ1EF104Z	AA			0.1 µF,25V
C573	VCEAZA1CW336M	AB			33 µF,16V,Electrolytic
C574	VCKYCZ1EF104Z	AA			0.1 µF,25V
C575	VCEAZA1CW107M	AC			100 µF,50V,Electrolytic
C576	VCKYTV1EB475K	AB			4.7 µF,25V
C577	VCKYTV1EB475K	AB			4.7 µF,25V
C578	VCCCCZ1HH221J	AB			220 pF,50V
C579	VCCCCZ1HH221J	AB			220 pF,50V
C580	VCKYCZ1AB224K	AA			0.22 µF,10V
C581	VCCCCZ1HH101J	AB			100 pF,50V
C582	VCKYCZ1AB224K	AA			0.22 µF,10V
C583	VCKYCZ1AB105K	AA			1 µF,10V
C584	VCKYCZ1AB105K	AA			1 µF,10V
C585	VCEAZA1HW106M	AB			10 µF,50V,Electrolytic
C603	VCKYCZ1EF104Z	AA			0.1 µF,25V
C604	VCCCCZ1HH180J	AA			18 pF,50V
C605	VCCCCZ1HH180J	AA			18 pF,50V
C609	VCKYCY1EF104Z	AA			0.1 µF,25V
C611	VCKYCZ1HB103K	AA			0.01 µF,50V
C612	VCKYCZ1HB103K	AA			0.01 µF,50V
C613	VCEAZA0JW108M	AC			1000 µF,6.3V,Electrolytic
C614	VCEAZA1HW475M	AB			4.7 µF,50V,Electrolytic
C615	VCEAZA1HW106M	AB			10 µF,50V,Electrolytic
C616	VCCCCZ1HH101J	AB			100 pF,50V
C619	VCEAZA1HW106M	AB			10 µF,50V,Electrolytic
C620	VCKYCZ1AB104K	AB			0.1 µF,10V
C621	VCKYCZ1AB104K	AB			0.1 µF,10V
C622	VCEAZA1AW107M	AB			100 µF,10V,Electrolytic
C649	VCCCCZ1HH101J	AB			100 pF,50V
C675	VCEAZA1HW106M	AB			10 µF,50V,Electrolytic
C677	VCCCCZ1HH101J	AB			100 pF,50V
C680	VCEAZA1HW106M	AB			10 µF,50V,Electrolytic
C700	VCKYCY1HB223K	AA			0.022 µF,50V
C701	RC-EZD105AF1H	AB			1 µF,50V,Electrolytic
C702	RC-EZD105AF1H	AB			1 µF,50V,Electrolytic
C703	VCKYCY1HB223K	AA			0.022 µF,50V
C704	VCKYCY1EB105K	AB			1 µF,25V
C705	VCKYCY1HB103K	AA			0.01 µF,50V
C706	VCKYCY1HB102K	AA			1000 pF,50V
C707	VCKYCY1HB102K	AA			1000 pF,50V
C708	VCCCCY1HH271J	AA			270 pF(CH),50V
C710	RC-EZD226AF1H	AC			22 µF,50V,Electrolytic
C711	VCKYCY1EF104Z	AA			0.1 µF,25V
C712	VCCCCY1HH820J	AA			82 pF(CH),50V
C718	VCKYCY1HB102K	AA			1000 pF,50V
C719	VCKYCY1HB102K	AA			1000 pF,50V
C720	VCCCCY1HH151J	AA			150 pF(CH),50V
C721	VCKYCY1HB223K	AA			0.022 µF,50V
C722	RC-EZD476AF1C	AC			47 µF,16V,Electrolytic
C723	VCCCCY1HH222J	AB			2200 pF(CH),50V
C724	RC-EZD474AF1H	AB			0.47 µF,50V,Electrolytic
C725	VCCCCY1HH271J	AA			270 pF(CH),50V
C801	VCEAZA1EW108M	AE			1000 µF,25V,Electrolytic
C802	VCEAZA1EW476M	AB			47 µF,25V,Electrolytic
C803	VCKYCY1EF104Z	AA			0.1 µF,25V
C804	VCEAZA1CW476M	AB			47 µF,16V,Electrolytic
C814	VCKYCY1AB105K	AB			1 µF,10V
C815	VCKYCY1AB105K	AB			1 µF,10V
C818	VCEAZA1CW107M	AC			100 µF,50V,Electrolytic
C819	VCKYCY1EF104Z	AA			0.1 µF,25V
C820	VCEAZA1AW107M	AB			100 µF,10V,Electrolytic
C821	VCKYCY1EF104Z	AA			0.1 µF,25V
C822	VCEAZA1CW226M	AC			22 µF,16V,Electrolytic
C823	VCKYCY1EF104Z	AA			0.1 µF,25V
C900	VCKYCZ1EF104Z	AA			0.1 µF,25V
C901	VCKYCZ1EF104Z	AA			0.1 µF,25V
C902	VCKYCZ1EF104Z	AA			0.1 µF,25V
C903	VCKYCZ1EF104Z	AA			0.1 µF,25V

NO.	PARTS CODE	PRICE RANK	NEW MARK	PART RANK	DESCRIPTION
[6] CAPACITORS					
C904	VCKYCZ1EF104Z	AA			0.1 µF,25V
C905	VCKYCY1HB333K	AB			0.033 µF,50V
C906	VCKYCY1HB333K	AB			0.033 µF,50V
C907	VCKYCY1HB333K	AB			0.033 µF,50V
C908	VCKYCZ1EF104Z	AA			0.1 µF,25V
C909	VCKYCZ1EF104Z	AA			0.1 µF,25V
C910	VCKYCY1HB333K	AB			0.033 µF,50V
C911	VCKYCZ1EF104Z	AA			0.1 µF,25V
C912	VCKYTV1HB104K	AB			0.1 µF,50V
C913	VCKYCY1HB102K	AA			1000 pF,50V
C914	VCKYTV1HB104K	AB			0.1 µF,50V
C915	VCKYCY1HB102K	AA			1000 pF,50V
C916	VCKYCY1HB103K	AA			0.01 µF,50V
C917	VCKYCY1HB103K	AA			0.01 µF,50V
C920	VCFYFA1HA474J	AC			0.47 µF,50V,Thin film
C921	VCFYFA1HA474J	AC			0.47 µF,50V,Thin film
C922	VCKYTV1HB104K	AB			0.1 µF,50V
C923	VCKYTV1HB104K	AB			0.1 µF,50V
C924	VCKYCY1HB102K	AA			1000 pF,50V
C925	VCKYCY1HB103K	AA			0.01 µF,50V
C926	VCKYCY1HB102K	AA			1000 pF,50V
C927	VCKYCY1HB103K	AA			0.01 µF,50V
C930	VCKYCY1EF104Z	AA			0.1 µF,25V
C931	VCKYCY1HB103K	AA			0.01 µF,50V
C937	VCCCCY1HH101J	AA			100 pF(CH),50V
C938	VCCCCY1HH101J	AA			100 pF(CH),50V
C939	VCCCCY1HH101J	AA			100 pF(CH),50V
C940	VCCCCY1HH101J	AA			100 pF(CH),50V
C941	VCCCCY1HH102J	AA			1000 pF(CH),50V
C942	VCCCCY1HH102J	AA			1000 pF(CH),50V
C943	VCKYCY1EF104Z	AA			0.1 µF,25V
C944	VCKYCY1EF104Z	AA			0.1 µF,25V
C945	VCKYCY1EF104Z	AA			0.1 µF,25V
C981	VCEAZA1HW684M	AB			0.68 µF,50V,Electrolytic
C983	VCKYCY1HB473K	AB			0.047 µF,50V
C984	VCKYCZ1EF104Z	AA			0.1 µF,25V
C985	VCKYCZ1EF104Z	AA			0.1 µF,25V
C986	VCEAZA1JW107M	AC			100 µF,63V,Electrolytic
C987	VCKYCY1EF104Z	AA			0.1 µF,25V
C988	VCKYCY1HB103K	AA			0.01 µF,50V
C989	VCKYCY1EF104Z	AA			0.1 µF,25V
[7] RESISTORS					
C510	VRS-CZ1JB000J	AB			0 ohms,Jumper,1/16W
C512	VRS-CZ1JB000J	AB			0 ohms,Jumper,1/16W
C513	VRS-CZ1JB000J	AB			0 ohms,Jumper,1/16W
C514	VRS-CZ1JB000J	AB			0 ohms,Jumper,1/16W
C982	VRS-CY1JB000J	AA			0 ohms,Jumper,0.8x1.55mm
FB403	VRS-CY1JB000J	AA			0 ohms,Jumper,0.8x1.55mm
FB500	VRS-CY1JB000J	AA			0 ohms,Jumper,0.8x1.55mm
FB501	VRS-CY1JB000J	AA			0 ohms,Jumper,0.8x1.55mm
GND801	VRS-CY1JB000J	AA			0 ohms,Jumper,0.8x1.55mm
GND802	VRS-CY1JB000J	AA			0 ohms,Jumper,0.8x1.55mm
GND804	VRS-CY1JB000J	AA			0 ohms,Jumper,0.8x1.55mm
GND805	VRS-CY1JB000J	AA			0 ohms,Jumper,0.8x1.55mm
GND806	VRS-CY1JB000J	AA			0 ohms,Jumper,0.8x1.55mm
JP201	VRS-TW2EE000J	AB			0 ohms,Jumper,1/4W
JP501	VRS-CY1JB000J	AA			0 ohms,Jumper,0.8x1.55mm
JP502	VRS-CY1JB000J	AA			0 ohms,Jumper,0.8x1.55mm
JP901	VRS-TQ2EF000J	AA			0 ohms,Jumper
JP902	VRS-CY1JB000J	AA			0 ohms,Jumper,0.8x1.55mm
JP903	VRS-TV2AB000J	AA			0 ohms,Jumper,1.25x2mm
L2	VRS-TV2AB000J	AA			0 ohms,Jumper,1.25x2mm
L3	VRS-TV2AB000J	AA			0 ohms,Jumper,1.25x2mm
L201	VRS-TV2AB000J	AA			0 ohms,Jumper,1.25x2mm
L420	VRS-TV2AB000J	AA			0 ohms,Jumper,1.25x2mm
L702	VRS-TV2AB000J	AA			0 ohms,Jumper,1.25x2mm
L703	VRS-TQ2EF000J	AA			0 ohms,Jumper
R27	VRS-CZ1JB102J	AB			1 kohms,1/16W
R28	VRS-CZ1JB823J	AB			82 kohms,1/16W
R29	VRS-CZ1JB821J	AA			820 ohms,1/16W
R30	VRS-CZ1JB272J	AB			2.7 kohms,1/16W
R31	VRS-CZ1JB473J	AA			47 kohms,1/16W
R32	VRS-CZ1JF4R7J	AA			4.7 ohms,1/16W
R33	VRS-CZ1JB000J	AB			0 ohms,Jumper,1/16W
R34	VRS-CZ1JB000J	AB			0 ohms,Jumper,1/16W
R35	VRS-CZ1JB000J	AB			0 ohms,Jumper,1/16W
R38	VRS-CY1JB000J	AA			0 ohms,Jumper,0.8x1.55mm
R43	VRS-CZ1JB105J	AB			1 Mohms,1/16W
R44	VRS-CZ1JB470J	AB			47 ohms,1/16W
R45	VRS-CZ1JB103J	AA			10 kohms,1/16W
R46	VRS-CZ1JB103J	AA			10 kohms,1/16W
R47	VRS-CZ1JF680J	AA			68 ohms,1/16W
R49	VRS-CZ1JB300F	AA			30 ohms,1/16W
R50	VRS-CZ1JB300F	AA			30 ohms,1/16W
R51	VRS-CZ1JB153J	AA			15 kohms,1/16W
R52	VRS-CZ1JB153J	AA			15 kohms,1/16W
R58	VRS-CZ1JB101J	AB			100 ohms,1/16W

NO.	PARTS CODE	PRICE RANK	NEW MARK	PART RANK	DESCRIPTION
[7] RESISTORS					
R59	VRS-CZ1JB101J	AB			100 ohms,1/16W
R60	VRS-CZ1JB330J	AA			33 ohms,1/16W
R61	VRS-CZ1JB330J	AA			33 ohms,1/16W
R62	VRS-CZ1JB330J	AA			33 ohms,1/16W
R63	VRS-CZ1JB101J	AB			100 ohms,1/16W
R64	VRS-CZ1JB101J	AB			100 ohms,1/16W
R65	VRS-CZ1JB103J	AA			10 kohms,1/16W
R66	VRS-CY1JB330J	AA			33 ohms,1/16W
R67	VRS-CY1JB330J	AA			33 ohms,1/16W
R68	VRS-CY1JB222J	AA			2.2 kohms,1/16W
R69	VRS-CY1JB222J	AA			2.2 kohms,1/16W
R70	VRS-CZ1JB103J	AA			10 kohms,1/16W
R71	VRS-CZ1JB101J	AB			100 ohms,1/16W
R72	VRS-CZ1JB101J	AB			100 ohms,1/16W
R73	VRS-CZ1JB101J	AB			100 ohms,1/16W
R74	VRS-CZ1JB101J	AB			100 ohms,1/16W
R75	VRS-CZ1JB101J	AB			100 ohms,1/16W
R76	VRS-CZ1JB101J	AB			100 ohms,1/16W
R77	VRS-CZ1JB101J	AB			100 ohms,1/16W
R79	VRS-CY1JB000J	AA			0 ohms,Jumper,0.8x1.55mm
R80	VRS-CZ1JB330J	AA			33 ohms,1/16W
R81	VRS-CZ1JB103J	AA			10 kohms,1/16W
R82	VRS-CZ1JB000J	AB			0 ohms,Jumper,1/16W
R86	VRS-CZ1JB101J	AB			100 ohms,1/16W
R87	VRS-CZ1JB101J	AB			100 ohms,1/16W
R88	VRS-CZ1JB101J	AB			100 ohms,1/16W
R89	VRS-CZ1JB101J	AB			100 ohms,1/16W
R97	VRS-CZ1JB101J	AB			100 ohms,1/16W
R98	VRS-CZ1JB000J	AB			0 ohms,Jumper,1/16W
R99	VRS-CZ1JB000J	AB			0 ohms,Jumper,1/16W
R100	VRS-CZ1JB473F	AA			47 kohms,1/16W
R101	VRS-CZ1JB823J	AB			82 kohms,1/16W
R102	VRS-CZ1JF563J	AA			56 kohms,1/16W
R103	VRS-CZ1JB152J	AB			1.5 kohms,1/16W
R104	VRS-CZ1JB152J	AB			1.5 kohms,1/16W
R105	VRS-CZ1JB153J	AA			15 kohms,1/16W
R106	VRS-CZ1JB272J	AB			2.7 kohms,1/16W
R107	VRS-CZ1JB473J	AA			47 kohms,1/16W
R108	VRS-CZ1JB103J	AA			10 kohms,1/16W
R109	VRS-CZ1JB123J	AB			12 kohms,1/16W
R110	VRS-CZ1JB472J	AB			4.7 kohms,1/16W
R111	VRS-CZ1JF392J	AA			3.9 kohms,1/16W
R112	VRS-CZ1JB000J	AB			0 ohms,Jumper,1/16W
R113	VRS-CZ1JF183J	AA			18 kohms,1/16W
R115	VRS-CZ1JB000J	AB			0 ohms,Jumper,1/16W
R116	VRS-CZ1JB103J	AA			10 kohms,1/16W
R120	VRS-CZ1JF183J	AA			18 kohms,1/16W
R201	VRS-CY1JB473J	AA			47 kohms,1/16W
R300	VRS-CY1JB103J	AA			10 kohms,1/16W
R301	VRS-CZ1JF201J	AA			200 ohms,1/16W
R302	VRS-CY1JB103J	AA			10 kohms,1/16W
R303	VRS-CY1JB103J	AA			10 kohms,1/16W
R304	VRS-CZ1JF1R0J	AA			1 ohms,1/16W
R305	VRS-CZ1JF201J	AA			200 ohms,1/16W
R306	VRS-CZ1JF4R7J	AA			4.7 ohms,1/16W
R309	VRS-CY1JB1R0J	AA			1 ohms,1/16W
R310	VRS-CY1JB103J	AA			10 kohms,1/16W
R311	VRS-CZ1JB105J	AB			1 Mohms,1/16W
R312	VRS-CZ1JB470J	AB			47 ohms,1/16W
R313	VRS-CZ1JB470J	AB			47 ohms,1/16W
R314	VRS-CZ1JB470J	AB			47 ohms,1/16W
R315	VRS-CZ1JB470J	AB			47 ohms,1/16W
R316	VRS-CZ1JB470J	AB			47 ohms,1/16W
R317	VRS-CZ1JB102J	AB			1 kohms,1/16W
R318	VRS-CZ1JB102J	AB			1 kohms,1/16W
R319	VRS-CY1JB102J	AA			1 kohms,1/16W
R320	VRS-CY1JB102J	AA			1 kohms,1/16W
R321	VRS-CZ1JB470J	AB			47 ohms,1/16W
R322	VRS-CZ1JB470J	AB			47 ohms,1/16W
R324	VRS-CZ1JB470J	AB			47 ohms,1/16W
R325	VRS-CZ1JB470J	AB			47 ohms,1/16W
R326	VRS-CZ1JB470J	AB			47 ohms,1/16W
R327	VRS-CZ1JB470J	AB			47 ohms,1/16W
R328	VRS-CZ1JB470J	AB			47 ohms,1/16W
R330	VRS-CZ1JB822J	AA			8.2 kohms,1/16W
R331	VRS-CZ1JB470J	AB			47 ohms,1/16W
R332	VRS-CZ1JB822J	AA			8.2 kohms,1/16W
R333	VRS-CZ1JB822J	AA			8.2 kohms,1/16W
R334	VRS-CZ1JB822J	AA			8.2 kohms,1/16W
R335	VRS-CZ1JB123J	AB			12 kohms,1/16W
R336	VRS-CZ1JB123J	AB			12 kohms,1/16W
R337	VRS-CZ1JB123J	AB			12 kohms,1/16W
R338	VRS-CZ1JB123J	AB			12 kohms,1/16W
R343	VRS-CZ1JB472J	AB			4.7 kohms,1/16W
R344	VRS-CZ1JB472J	AB			4.7 kohms,1/16W
R345	VRS-CZ1JB472J	AB			4.7 kohms,1/16W
R346	VRS-CZ1JB472J	AB			4.7 kohms,1/16W
R347	VRS-CZ1JB472J	AB			4.7 kohms,1/16W
R348	VRS-CZ1JB472J	AB			4.7 kohms,1/16W

NO.	PARTS CODE	PRICE RANK	NEW MARK	PART RANK	DESCRIPTION
[7] RESISTORS					
R349	VRS-CY1JB3R3J	AA			3.3 ohms,1/16W
R420	VRS-CY1JB473J	AA			47 kohms,1/16W
R421	VRS-CY1JB473J	AA			47 kohms,1/16W
R422	VRS-CY1JB102J	AA			1 kohms,1/16W
R423	VRS-CY1JB102J	AA			1 kohms,1/16W
R424	VRS-CY1JB391J	AA			390 ohms,1/16W
R425	VRS-CY1JB391J	AA			390 ohms,1/16W
R426	VRS-TQ2EF180J	AA			18 ohms,1/8W
R427	VRS-TQ2EF180J	AA			18 ohms,1/8W
R430	VRS-CY1JB182J	AA			1.8 kohms,1/16W
R431	VRS-CY1JB222J	AA			2.2 kohms,1/16W
R432	VRS-CY1JB332J	AA			3.3 kohms,1/16W
R433	VRS-CY1JB562J	AA			5.6 kohms,1/16W
R500	VRS-CY1JB103J	AA			10 kohms,1/16W
R501	VRS-CY1JB103J	AA			10 kohms,1/16W
R502	VRS-CY1JB123J	AA			12 kohms,1/16W
R503	VRS-CY1JB123J	AA			12 kohms,1/16W
R530	VRS-CZ1JB103J	AA			10 kohms,1/16W
R532	VRS-CZ1JB822J	AA			8.2 kohms,1/16W
R533	VRS-CZ1JB822J	AA			8.2 kohms,1/16W
R534	VRS-CZ1JB822J	AA			8.2 kohms,1/16W
R535	VRS-CZ1JF3R3J	AA			3.3 ohms,1/16W
R536	VRS-CZ1JB103J	AA			10 kohms,1/16W
R537	VRS-CZ1JB822J	AA			8.2 kohms,1/16W
R543	VRS-CZ1JB222J	AB			2.2 kohms,1/16W
R544	VRS-CZ1JB222J	AB			2.2 kohms,1/16W
R545	VRS-CZ1JB000J	AB			0 ohms,Jumper,1/16W
R546	VRS-CZ1JB000J	AB			0 ohms,Jumper,1/16W
R547	VRS-CZ1JB103J	AA			10 kohms,1/16W
R548	VRS-CZ1JB103J	AA			10 kohms,1/16W
R549	VRS-CZ1JB223J	AB			22 kohms,1/16W
R550	VRS-CZ1JB103J	AA			10 kohms,1/16W
R570	VRS-CZ1JB103J	AA			10 kohms,1/16W
R571	VRS-CZ1JB103J	AA			10 kohms,1/16W
R572	VRS-CZ1JB000J	AB			0 ohms,Jumper,1/16W
R576	VRS-CZ1JB103J	AA			10 kohms,1/16W
R577	VRS-CZ1JB103J	AA			10 kohms,1/16W
R578	VRS-CZ1JB104J	AA			100 kohms,1/16W
R579	VRS-CZ1JB104J	AA			100 kohms,1/16W
R580	VRS-CZ1JB823J	AB			82 kohms,1/16W
R581	VRS-CZ1JB823J	AB			82 kohms,1/16W
R582	VRS-CZ1JF563J	AA			56 kohms,1/16W
R583	VRS-CZ1JB272J	AB			2.7 kohms,1/16W
R584	VRS-CZ1JB224J	AA			220 kohms,1/16W
R585	VRS-CZ1JB562J	AB			5.6 kohms,1/16W
R585	VRS-CZ1JB562J	AB			5.6 kohms,1/16W
R587	VRS-CZ1JB103J	AA			10 kohms,1/16W
R588	VRS-CZ1JB000J	AB			0 ohms,Jumper,1/16W
R589	VRS-CZ1JB000J	AB			0 ohms,Jumper,1/16W
R590	VRS-CZ1JB000J	AB			0 ohms,Jumper,1/16W
R591	VRS-CY1JB331J	AA			330 ohms,1/16W
R600	VRS-CZ1JB000J	AB			0 ohms,Jumper,1/16W
R601	VRS-CZ1JB000J	AB			0 ohms,Jumper,1/16W
R602	VRS-CZ1JB330J	AA			33 ohms,1/16W
R603	VRS-CZ1JB102J	AB			1 kohms,1/16W
R611	VRS-CZ1JB102J	AB			1 kohms,1/16W
R612	VRS-CZ1JB102J	AB			1 kohms,1/16W
R613	VRS-CZ1JB102J	AB			1 kohms,1/16W
R614	VRS-CZ1JB102J	AB			1 kohms,1/16W
R615	VRS-CZ1JB102J	AB			1 kohms,1/16W
R616	VRS-CZ1JB102J	AB			1 kohms,1/16W
R617	VRS-CZ1JB102J	AB			1 kohms,1/16W
R618	VRS-CZ1JB102J	AB			1 kohms,1/16W
R619	VRS-CZ1JB102J	AB			1 kohms,1/16W
R620	VRS-CZ1JB102J	AB			1 kohms,1/16W
R621	VRS-CZ1JB102J	AB			1 kohms,1/16W
R622	VRS-CZ1JB102J	AB			1 kohms,1/16W
R623	VRS-CZ1JB102J	AB			1 kohms,1/16W
R624	VRS-CZ1JB102J	AB			1 kohms,1/16W
R625	VRS-CZ1JB102J	AB			1 kohms,1/16W
R626	VRS-CZ1JB102J	AB			1 kohms,1/16W
R627	VRS-CZ1JB102J	AB			1 kohms,1/16W
R628	VRS-CZ1JB102J	AB			1 kohms,1/16W
R629	VRS-CZ1JB102J	AB			1 kohms,1/16W
R630	VRS-CZ1JB102J	AB			1 kohms,1/16W
R631	VRS-CZ1JB102J	AB			1 kohms,1/16W
R632	VRS-CZ1JB102J	AB			1 kohms,1/16W
R633	VRS-CZ1JB102J	AB			1 kohms,1/16W
R634	VRS-CY1JB102J	AA			1 kohms,1/16W
R635	VRS-CY1JB102J	AA			1 kohms,1/16W
R636	VRS-CZ1JB102J	AB			1 kohms,1/16W
R639	VRS-CZ1JB102J	AB			1 kohms,1/16W
R640	VRS-CZ1JB102J	AB			1 kohms,1/16W
R641	VRS-CZ1JB102J	AB			1 kohms,1/16W
R642	VRS-CZ1JB102J	AB			1 kohms,1/16W
R643	VRS-CZ1JB102J	AB			1 kohms,1/16W
R644	VRS-CZ1JB102J	AB			1 kohms,1/16W
R645	VRS-CZ1JB102J	AB			1 kohms,1/16W
R646	VRS-CZ1JB102J	AB			1 kohms,1/16W

NO.	PARTS CODE	PRICE RANK	NEW MARK	PART RANK	DESCRIPTION
[7] RESISTORS					
R647	VRS-CZ1JB102J	AB			1 kohms,1/16W
R648	VRS-CZ1JB102J	AB			1 kohms,1/16W
R649	VRS-CZ1JB102J	AB			1 kohms,1/16W
R650	VRS-CZ1JB102J	AB			1 kohms,1/16W
R651	VRS-CZ1JB102J	AB			1 kohms,1/16W
R652	VRS-CZ1JB102J	AB			1 kohms,1/16W
R653	VRS-CZ1JB102J	AB			1 kohms,1/16W
R654	VRS-CZ1JB102J	AB			1 kohms,1/16W
R655	VRS-CZ1JB102J	AB			1 kohms,1/16W
R656	VRS-CZ1JB102J	AB			1 kohms,1/16W
R657	VRS-CZ1JB102J	AB			1 kohms,1/16W
R658	VRS-CZ1JB102J	AB			1 kohms,1/16W
R659	VRS-CZ1JB103J	AA			10 kohms,1/16W
R660	VRS-CZ1JB102J	AB			1 kohms,1/16W
R663	VRS-CZ1JB102J	AB			1 kohms,1/16W
R664	VRS-CZ1JB330J	AA			33 ohms,1/16W
R666	VRS-CZ1JB000J	AB			0 ohms,Jumper,1/16W
R670	VRS-CZ1JB103J	AA			10 kohms,1/16W
R672	VRS-CZ1JB103J	AA			10 kohms,1/16W
R675	VRS-CY1JB562J	AA			5.6 kohms,1/16W
R676	VRS-CZ1JB000J	AB			0 ohms,Jumper,1/16W
R678	VRS-CZ1JB562J	AB			5.6 kohms,1/16W
R680	VRS-CZ1JB562J	AB			5.6 kohms,1/16W
R700	VRS-TW2HF000J	AB			0 ohms,Jumper,1/2W
R702	VRS-CY1JB101J	AA			100 ohms,1/16W
R703	VRS-CY1JB561J	AA			560 ohms,1/16W
R704	VRS-CY1JB151J	AA			150 ohms,1/16W
R705	VRS-CY1JB102J	AA			1 kohms,1/16W
R706	VRS-CY1JB102J	AA			1 kohms,1/16W
R707	VRS-CY1JB102J	AA			1 kohms,1/16W
R708	VRS-CY1JB102J	AA			1 kohms,1/16W
R709	VRS-TW2HF000J	AB			0 ohms,Jumper,1/2W
R712	VRS-CY1JB223J	AA			22 kohms,1/16W
R715	VRS-CY1JB272J	AA			2.7 kohms,1/16W
R716	VRS-CY1JB472J	AA			4.7 kohms,1/16W
R719	VRS-CY1JB182J	AA			1.8 kohms,1/16W
R724	VRS-CY1JB472J	AA			4.7 kohms,1/16W
R807	VRS-CY1JB000J	AA			0 ohms,Jumper,0.8x1.55mm
R808	VRS-CZ1JB474F	AA			470 kohms,1/16W
R809	VRS-CY1JB563F	AA			56 kohms,1/16W
R810	VRS-VV3DA200J	AB			20 ohms,2W
R815	VRS-VV3DA200J	AB			20 ohms,2W
R822	VRS-CY1JB472J	AA			4.7 kohms,1/16W
R901	VRS-CZ1JB470J	AB			47 ohms,1/16W
R902	VRS-CZ1JB470J	AB			47 ohms,1/16W
R905	VRS-CZ1JB273J	AA			27 kohms,1/16W
R908	VRS-CZ1JB000J	AB			0 ohms,Jumper,1/16W
R909	VRS-CZ1JB100J	AA			10 ohms,1/16W
R911	VRS-CZ1JB100J	AA			10 ohms,1/16W
R912	VRS-CZ1JB100J	AA			10 ohms,1/16W
R913	VRS-CZ1JB100J	AA			10 ohms,1/16W
R914	VRS-CY1JB3R3J	AA			3.3 ohms,1/16W
R917	VRS-CY1JB3R3J	AA			3.3 ohms,1/16W
R922	VRS-CY1JB3R3J	AA			3.3 ohms,1/16W
R923	VRS-CY1JB3R3J	AA			3.3 ohms,1/16W
R928	VRS-CY1JB332J	AA			3.3 kohms,1/16W
R983	VRD-RT2HD681J	AA			680 ohms,1/2W
R985	VRD-RT2HD153J	AB			15 kohms,1/2W
R986	VRS-CY1JB000J	AA			0 ohms,Jumper,0.8x1.55mm
R987	VRS-CY1JB000J	AA			0 ohms,Jumper,0.8x1.55mm
R990	VRS-CY1JB102J	AA			1 kohms,1/16W
R991	VRS-CY1JB330J	AA			33 ohms,1/16W
R992	VRS-CY1JB000J	AA			0 ohms,Jumper,0.8x1.55mm
RA18	VRS-CZ1JB101J	AB			100 ohms,1/16W
RA19	VRS-CZ1JB101J	AB			100 ohms,1/16W
RA601	VRS-CZ1JB103J	AA			10 kohms,1/16W
RA603	VRS-CZ1JB103J	AA			10 kohms,1/16W
RA604	VRS-CZ1JB103J	AA			10 kohms,1/16W
RA607	VRS-CZ1JB103J	AA			10 kohms,1/16W
RA608	VRS-CZ1JB103J	AA			10 kohms,1/16W
RA613	VRS-CZ1JB103J	AA			10 kohms,1/16W
RA614	VRS-CZ1JB103J	AA			10 kohms,1/16W
RA615	VRS-CZ1JB103J	AA			10 kohms,1/16W
RA617	VRS-CZ1JB103J	AA			10 kohms,1/16W
RB601	VRS-CZ1JB104J	AA			100 kohms,1/16W
RB602	VRS-CZ1JB000J	AB			0 ohms,Jumper,1/16W
RU601	VRS-CZ1JB103J	AA			10 kohms,1/16W
RU602	VRS-CZ1JB103J	AA			10 kohms,1/16W
RU606	VRS-CZ1JB103J	AA			10 kohms,1/16W
RU607	VRS-CZ1JB103J	AA			10 kohms,1/16W
RU618	VRS-CZ1JB103J	AA			10 kohms,1/16W
RU619	VRS-CZ1JB103J	AA			10 kohms,1/16W
[8] OTHER CIRCUITRY PARTS					
Bi201	QCNWNB667AWPZ	AM			Connector Ass'y,8 / 7 Pin [with CNS602]
Bi400	QCNWNB663AWPZ	AH			Connector Ass'y,5 / 4 Pin [with CNS400]
Bi420	QCNWNB664AWPZ	AK			Connector Ass'y,7 / 6 Pin [with CNS420]
Bi700	QCNWNB662AWPZ	AF			Connector Ass'y,5 / 4 Pin [with CNS700]

NO.	PARTS CODE	PRICE RANK	NEW MARK	PART RANK	DESCRIPTION
[8] OTHER CIRCUITRY PARTS					
Bi701	QCNWNB665AWPZ	AF			Connector Ass'y,2 Pin [with BI421]
Bi801	QCNWNB660AWPZ	AK			Connector Ass'y,10 / 9 Pin [with CNS801]
Bi901	QCNWNB661AWPZ	AG			Connector Ass'y,5 / 4 Pin [with CNS901]
CNP1	QCNCWYH16AWZZ	AD			Connector,16 Pin
CNP2	QCNCM202FAWZZ	AB			Connector,6 Pin
CNP4	QCNCM201EAWZZ	AB			Connector,5 Pin
CNP5	QCNCM202DAWZZ	AB			Connector,4 Pin
CNP7	QCNCM202GAWZZ	AB			Connector,7 Pin
CNP201	QCNCWA046AW30	AQ			Connector,30 Pin
CNP501	QCNCM201GAWZZ	AB			Connector,6 Pin
CNP600	QCNCWYH04AWZZ	AB			Connector,4 Pin
CNP601	QCNCWYP12AWZZ	AD			Connector,12 Pin
CNP700	QCNCWYH12AWZZ	AD			Connector,12 Pin
CNS2	QCNWNB671AWPZ	AG			Connector Ass'y,6 Pin
CNS4	QCNWNB666AWPZ	AF			Connector Ass'y,5 Pin
FFC1	QCNWNB672AWPZ	AE			Flat Cable, 16 Pin
FFC601	QCNWNB668AWPZ	AE			Flat Cable, 12 Pin
FL700	VVKNA16SM21-1	AQ			FL Display
JK400	QSOCZA030AWZZ	AF			Jack, USB
JK420	QJAKMA036AWZZ	AG			Jack, Audio In
JK421	QJAKMA036AWZZ	AG			Jack, Headphone In
JK501	QSOCJA051AWZZ	AF			Jack, Video
JK902	QSOCJA044AWZZ	AC			Jack, Subwoofer Pre-Out
LUG401	QCNWNB708AWPZ	AE			Lug Wire, 85mm
LUG700	QCNWNB709AWPZ	AD			Lug Wire, 85mm
SC600	QTANAA038AWZZ	AL			Terminal, Speaker
SW401	92LSWiCHT1663T	AC			Switch,Key Type [Tuner Preset Down, CD/USBTrack Down, iPod/iPhone Skip Down]
SW402	92LSWiCHT1663T	AC			Switch,Key Type [Tuner Preset Up, CD/USBTrack Up, iPod/iPhone Skip Up]
SW403	92LSWiCHT1663T	AC			Switch,Key Type [Disc / USB STOP]
SW404	92LSWiCHT1663T	AC			Switch,Key Type [Disc / USB / iPod / iPhone PLAY/PAUSE]
SW405	92LSWiCHT1663T	AC			Switch,Key Type [TRAY OPEN / CLOSE]
SW700	92LSWiCHT1663T	AC			Switch,Key Type [POWER ON/STAND-BY]
SW701	92LSWiCHT1663T	AC			Switch,Key Type [FUNCTION]
TUN301	RTUNSA042AWZZ	AX			Tuner Pack
VR700	QSW-ZA012AWZZ	AF			Switch,Jog Type [VOLUME]
WiRE A	QCNWNB710AWPZ	AD			Single Wire, 130mm

[9] CABINET PARTS / CD MECHANISM PARTS

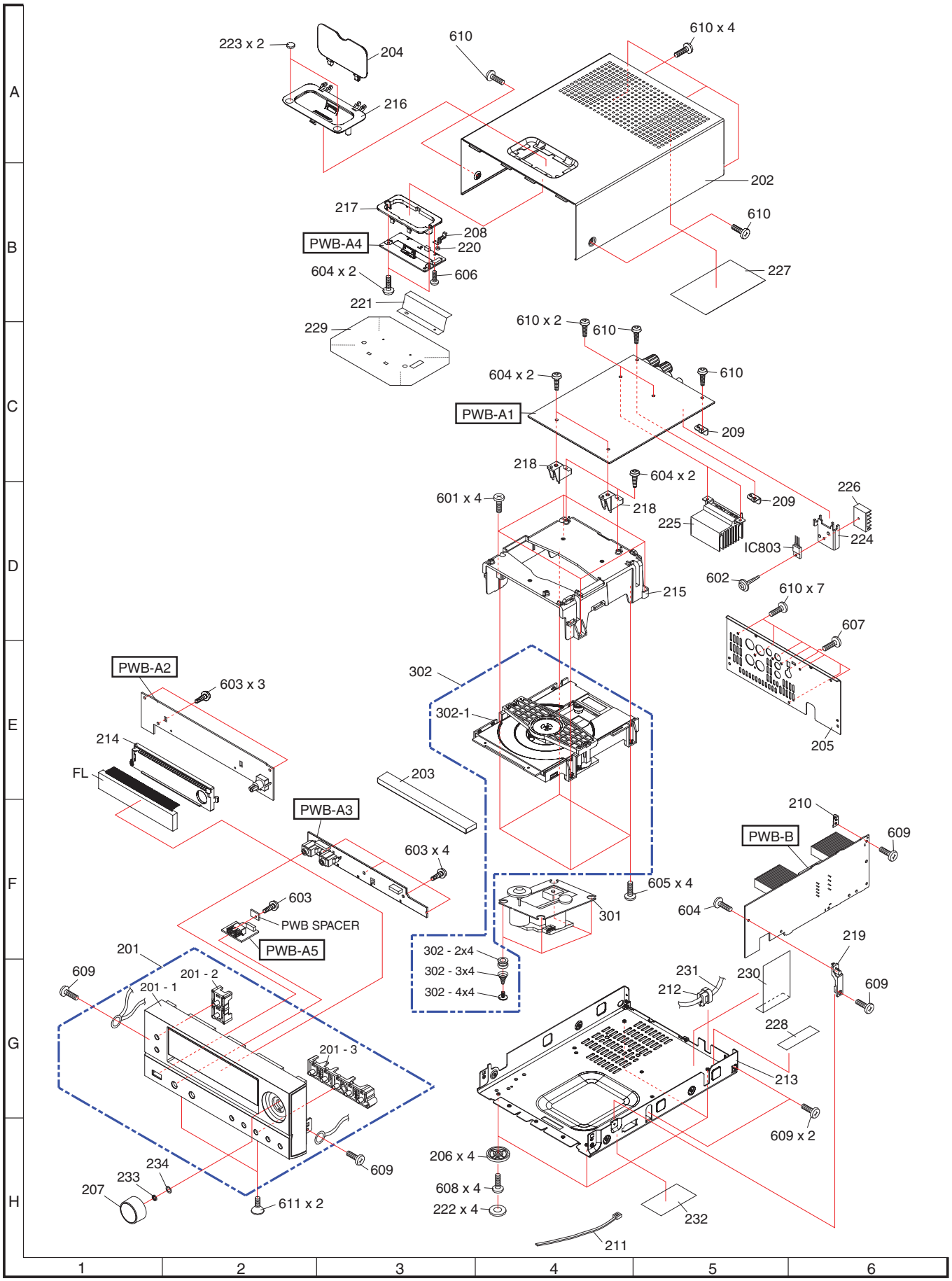

NO.	PARTS CODE	PRICE RANK	NEW MARK	PART RANK	DESCRIPTION
[9] CABINET PARTS / CD MECHANISM PARTS					
201	CCABA8240AW01	BC			Front Panel Ass'y
201-1	HPNLCA223AW02	AZ			Front Panel with Decoration Panel
201-2	JKNBZA327AWSA	AH			Button, Power
201-3	JKNBZA328AWSF				Button, Operation
202	GCAB-A107AW02	AX			Top Cabinet Ass'y
203	GCOVAA312AWSA	AG			Disc Tray Cover
204	GDORFA035AWSB	AL			Door, iPod
205	GiTARA845AWSA				Rear Panel [For U.S.A. , Canada]
205	GiTARA975AWSA				Rear Panel [For Mexico]
206	GLEGPA025AWSA	AD			Leg
207	JKNBKA072AWSA	AN			Knob, Volume
208	LANGQA011AWZZ	AB			Spring Plate
209	LANGT0042AWFW	AC			Bracket, PWB
210	LANGTA026AWFW	AB			Bracket, PWB
211	LBND-1011AWZZ	AA			Nylon Band
212	LBSHC0005AWZZ	AD			Bush, AC Power Supply Cord
213	LCHSMA114AWFW	AR			Chassis, Main
214	LHLDZA237AWZZ	AD			Holder, FL Display
215	LHLDZA248AWZZ	AH			Holder, CD Mechanism
216	LHLDZA249AWSB	AH			Holder, iPod
217	LHLDZA261AWZZ	AD			Spacer, iPod
218	LHLDZA269AWZZ	AC			Holder, PWB
219	LHLDZA270AWZZ	AC			Holder, PWB
220	LX-WZA026AWZZ	AB			Door Washer
221	PCOVQA017AWZZ	AD			Cover, iPod Door
222	PCUSGA163AWZZ	AC			Cushion, Leg
223	PCUSGA172AWSB	AB			Cushion, iPod Door
224	PRDARA111AWFW	AD			Heat Sink, B
225	PRDARA229AWFW	AL			Heat Sink, A
226	PRDARA233AWFW	AE			Heat Sink, C
227	PSHEZA275AWZZ	AF			Sheet, Safety Cover
228	PSHEZA276AWZZ	AC			Sheet, Safety Cover
229	PSHEZA278AWZZ	AH			Sheet, Copper
230	PSHEZA280AWZZ	AC			Sheet, Safety Cover
⚠ 231	QACCDA002AWZZ	AN			AC Power Supply Cord
232	TSPC-B689AWZZ				Label, Specification [For U.S.A. , Canada]
232	TSPC-B694AWZZ				Label, Specification [For Mexico]
233	----------	-			Nut (Not Replacement Item)
234	----------	-			Washer (Not Replacement Item)
301	KMECZA032AWZZ	AX			CD Mechanism Unit
302	KMECZA025AW01	AT			Loader Ass'y
302-1	----------	-			CD Loader (Not Replacement Item)
302-2	----------	-			Cushion (Not Replacement Item)
302-3	----------	-			Spring (Not Replacement Item)
302-4	----------	-			Screw, Special (Not Replacement Item)
601	LX-BZA043AWF7	AA			Screw, Special
602	LX-JZ0036AWF7	AC			Screw, Special
603	XEBY726P08000	AA			Screw, M2.6 X8mm
604	XEBY730P08000	AA			Screw, M3 X8mm
605	XEBY730P10000	AA			Screw, M3 X10mm
606	XEPY717P05000	AB			Screw, Special
607	XHPY830P06000	AB			Screw, M3 X6mm
608	XJBY730P06000	AA			Screw, M3 X6mm
609	XJBY730P08000	AA			Screw, M3 X8mm
610	XJBY830P08000	AB			Screw, M3 X8mm
611	XJSY830P08000	AB			Screw, M3 X8mm

NOTE: FOR CD MECHANISM PARTS, ITEM NO. ARE 3XX

[10] SPEAKER BOX PARTS

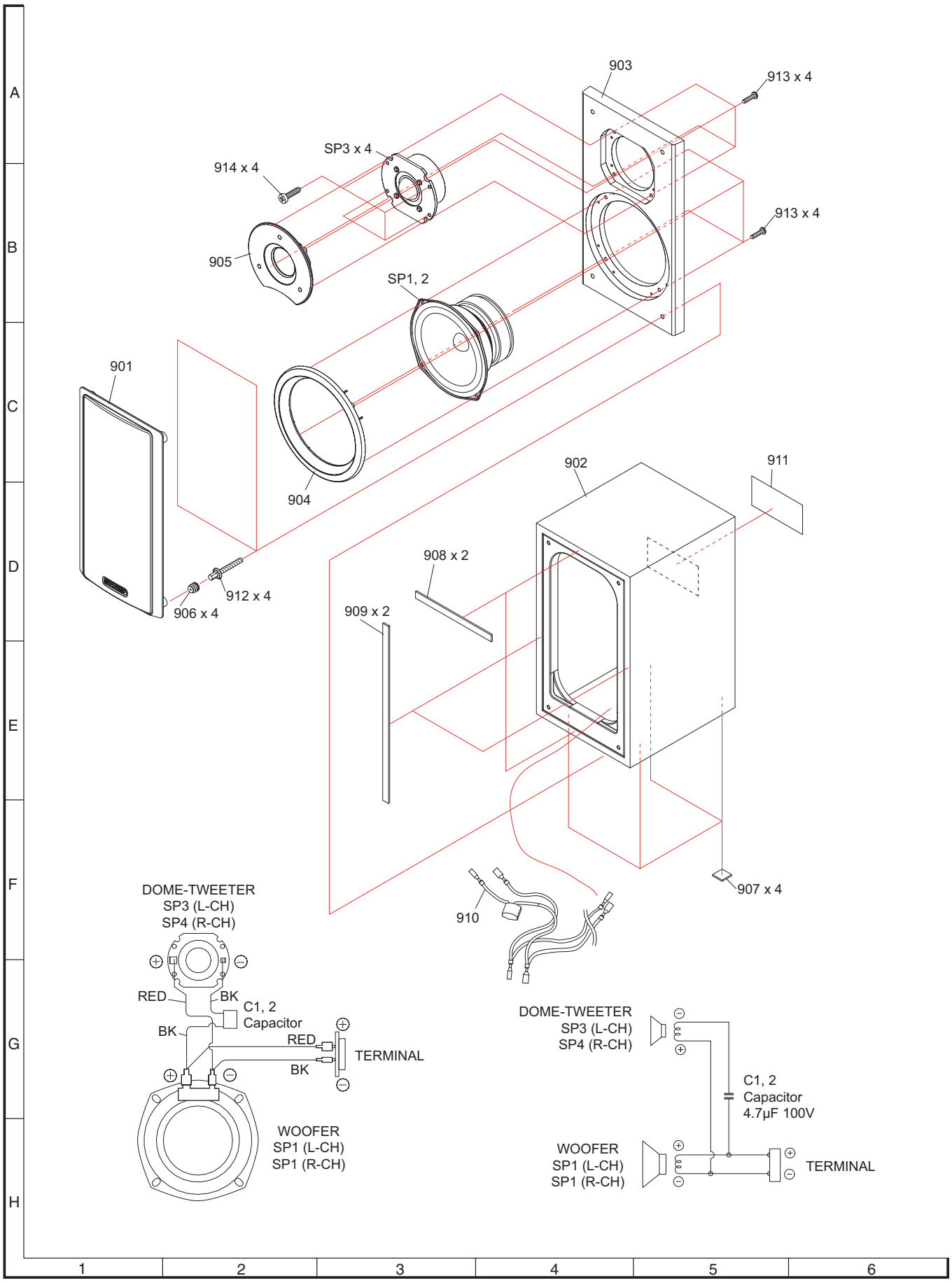

NO.	PARTS CODE	PRICE RANK	NEW MARK	PART RANK	DESCRIPTION
[10] SPEAKER BOX PARTS					
901	CWAKPA055AW01	AX			Net Frame Ass'y
902	GBOXSA296AW01				Wooden Box Ass'y
903	GiTASA279AWSA				Front Board
904	HDECQA552AWSA	AQ			Ring, Woofer
905	HDECQA553AWSA	AQ			Ring, Tweeter
906	LHLDZ8002AWSB	AF			Holder, Catching
907	PCUSGA020AWZZ	AB			Cushion, Leg
908	PCUSSA057AWZZ	AE			Cushion, Top/Bottom
909	PCUSSA058AWZZ	AE			Cushion, Side
910	QCNWNB444AWPZ	AR			Lead Wire Ass'y
911	TSPC-B627AWZZ				Label, Specification
912	LX-PZA002AWZZ	AG			Screw, Special
913	XEMY835P14000	AC			Screw, M3.5 x 14mm
914	XMTY735P14000	AC			Screw, M3.5 x 14mm
SP1,2	RSP-ZA334AWZZ	AZ			Woofer
SP3,4	RSP-ZA335AWZZ	AY			Dome-Tweeter
[11] ACCESSORIES / PACKING PARTS					
1	92LFANT1535A	AF			FM Antenna
2	GCOVAA238AWSA	AD			Adaptor, i-Phone (marking 12)
3	GCOVAA239AWSA	AD			Adaptor, i-Phone 3G (marking 15)
4	GCOVAA294AWSA	AD			Adaptor, i-Phone 4G (marking 19)
5	GiTAUA014AW01	AR			Stand for iPad
6	QANTLA006AWZZ				AM Loop Antenna
7	QCNWHA041AWPZ	AR			Speaker Cord
8	RRMCGA264AWSA				Remote Control
9	TiNSZB282AWZZ				Operation Manual [For U.S.A. , Mexico]
9	TiNSKA072AWZZ				Operation Manual [For Canada]
[12] P.W.B. ASSEMBLY					

NO.	PARTS CODE	PRICE RANK	NEW MARK	PART RANK	REMARK (interchangeable)	DESCRIPTION
PWB-A	92LPWB8250MANS	-			S Category	Main (A1) / Display (A2) / Key/Jack (A3) / iPod (A4) / USB (A5)
⚠ PWB-B	RUiTZA042AW01				X Category	SMPS
[13] OTHER SERVICE PARTS						
	UDSKA0004AFZZ	AZ			CD Optical Pickup Lens Cleaner Disc	

[11] ACCESSORIES / PACKING PARTS

PACKING METHOD (FOR U.S.A ONLY)

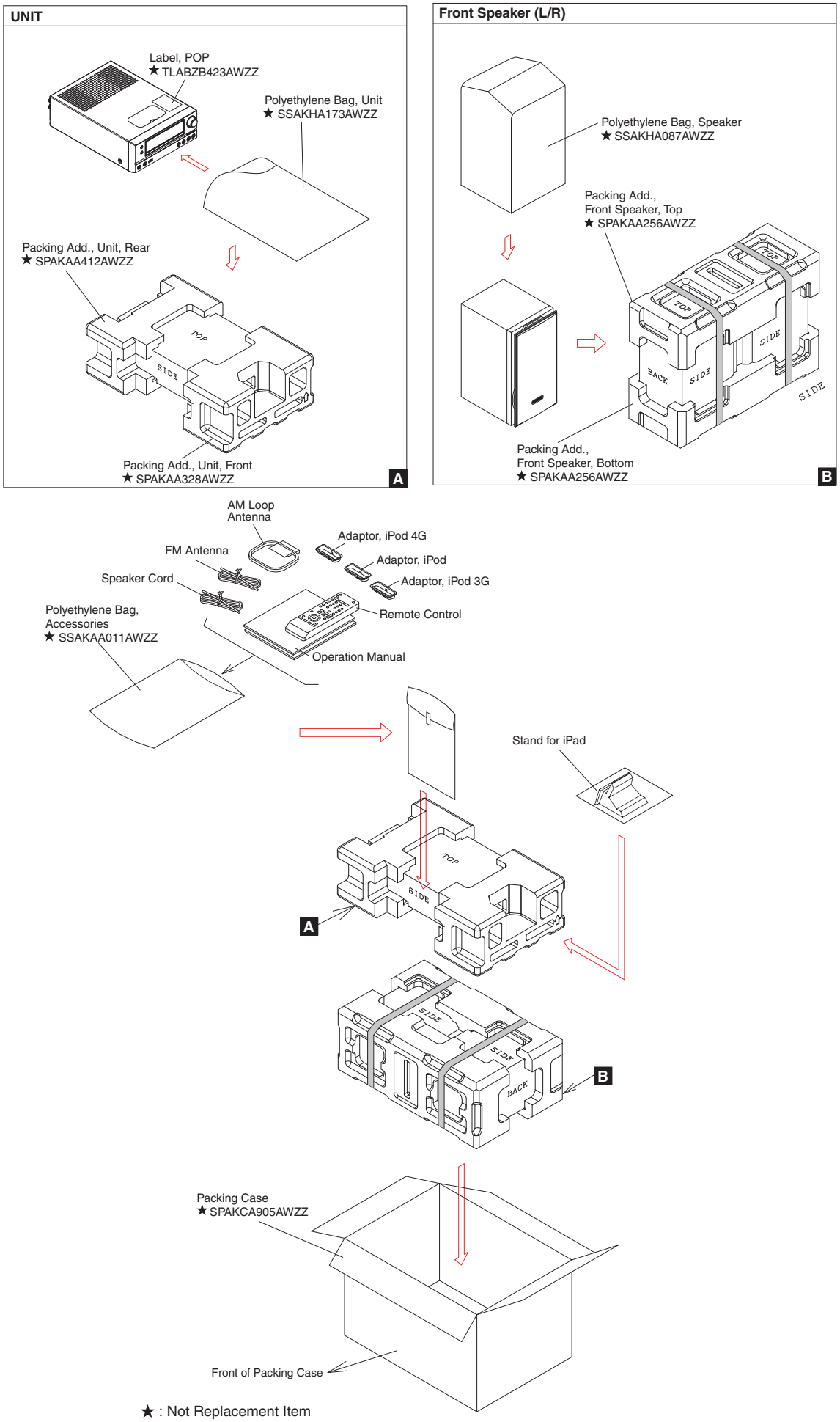

★ : Not Replacement Item

SHARP

COPYRIGHT © 2012 BY SHARP CORPORATION

ALL RIGHTS RESERVED.

No part of this publication may be reproduced,
stored in a retrieval system, or transmitted in
any form or by any means, electronic, mechanical,
photocopying, recording, or otherwise, without
prior written permission of the publisher.

SHARP CORPORATION
S&O Electronics (Malaysia) Sdn. Bhd.
Sungai Petani, Kedah,
Malaysia

Printed in Malaysia
A1204-1MX•RR•M
SC